adbri MASONRY

October 2, 2013

David Tooby
King and Campbell Pty Ltd
PO Box 243
Port Macquarie NSW 2444

Re: Permeable Pavements in Trafficable Areas.

Concrete segmental permeable pavements consist of surface layer of segmental concrete pavers that are shaped to create drainage channels that allow water to pass through the surface. The surface consists of the pavers placed on a bedding layer of 2-5mm aggregate and this aggregate is used as a jointing material and to fill the drainage channels. While the principles of the pavement are the same as any segmental pavement, the success of a permeable pavement, especially one carrying heavy loads, depends on the base course materials chosen and the setup of the drainage system that is needed to cope with the water infiltrating the surface.

Modern pavement design aims to exclude water from the pavement substructure to prevent saturation of the granular base and sub-base materials that have been compacted to high levels. Saturation of these materials leads to high hydrostatic pressure in the pores under load, a subsequent loss of fines and thus a loss of compaction. A trafficked permeable pavement is designed under the same principles but, instead of densely graded bases, the materials chosen have reduced fines contents which allow water to drain through the pavement under gravity and prevent the build up of high pore pressures. Depending on the subgrade conditions the infiltrated water is either drained directly to the soil under the pavement, to adjacent infiltration trenches or to a subsurface drainage system.

Adbri Masonry has 15 years experience in the design and use of permeable segmental pavements. To apply this experience to the particular circumstances of the pavement design outlined for Inverell is difficult as we have no experience with the proposed strada cells to be used under the pavement.

However, the design requirements are similar to the circumstances at Sydney Olympic Park at Homebush Bay, a pavement on a highly plastic clay subgrade designed to have the dual purpose of being able to support mature trees while being able to carry up to 105 equivalent standard axles (ESA).

In that project the gap graded engineered soil (structural soil) provided properties that are consistent with those required for the sub-base of a permeable pavement which means that the growing medium, the structural soil, acts as an integral part of the pavement. A geotextile filter is installed over the compacted subgrade and the layer of the engineered sub-base soil is placed and compacted.

If the proposed strada cell matches or exceeds the requirements of a standard road authority subbase, such as a GMS40 or MS50 in RMS Specification 3051 GRANULAR BASE AND SUBBASE MATERIALS FOR SURFACED ROAD PAVEMENTS or no-fines drainage materials to RMS specification 3222 NO FINES CONCRETE (FOR SUBSURFACE DRAINAGE).

Over the engineered sub-base, cell or otherwise, a no-fines base course should be placed. This layer acts as additional structural support and a filter layer to prevent the 2-5mm bedding and jointing materials falling into the sub base. It must also have enough permeability so as not to interfere with tree growth. As shown by Shackel et al 2001[1], removing the fines less than 600μm or 1.18mm from a RTA specification DGB20 base leads to large increases in the permeability and decreases of up to 45% for the resilient modulus or stiffness of the pavement when saturated. Due to the structural performance of

20 Kelso Crescent | PO Box 259 | t 1300 365 565
Moorebank NSW 1875 | Moorebank NSW 1875 | f (02) 9601 7446

the subbase, a nominal layer of 100mm is usually adequate for the base course. This may be able to be confirmed using the mechanistic analysis in the LOCKPAVE software package available from the Concrete Masonry Association of Australia (www.cmaa.com.au).

For pavers with drainage holes, such as the proposed Ecotrihex® permeable paver, the Concrete Masonry Association of Australia (CMAA) recommends a 10 year design infiltration rate of 900 l/sec/hec used. This rate has been calculated from extensive research both in Australia[2] and overseas[3,4] and I have attached some of this research for your information.

To summarise, a suitably designed permeable pavement incorporating engineered subbases can successfully combine the requirements of trees and traffic.

Please contact me if you have further questions regarding this issue.

Yours faithfully,

Adbri Masonry PTY LTD

Richard Martin

Sales Manager - Sydney Commercial

(1) Shackel B, Jitakeerul P. and Prasetyo S.B. (2001). An Experimental Study of Unbound Base, Material for Use In Permeable Pavements. Proc. 16th Conf. Australian Road Research Board, Melbourne

(2) Shackel B,(2010) The Design, Construction And Evaluation Of Permeable Pavements In Australia, 24th ARRB Conference, Melbourne,

(3) BORGWARDT, S., 1997. Performance and Fields of Application for Permeable Paving Systems. Betonwerk + Fertigteil-Technik

(4) BORGWARDT, S., 2006. Long-Term In-Situ Infiltration Performance Of Permeable Concrete Block Pavement. Proc 8th Int. Conf. On Concrete Block Paving, San Francisco.

DESIGN OF PERMEABLE PAVEMENTS FOR AUSTRALIAN CONDITIONS

Brian Shackel, University of New South Wales, Australia

Simon Beecham, University of South Australia, Australia

David Pezzaniti, University of South Australia, Australia

Baden Myers, University of South Australia, Australia

ABSTRACT

The paper begins by summarising the need for permeable pavements in Australia in the context of Water Sensitive Urban Design. The benefits and limitations of such pavements are then discussed. Factors influencing the design of permeable pavements are critically assessed. The systematic development and implementation of a new comprehensive design method specific to Australian conditions is then described. This method embraces all type of pavement including roads and industrial applications. Finally the paper summarises selected case histories of permeable pavements both in Australia and overseas which illustrate the scope and application of permeable pavements.

INTRODUCTION

Improved stormwater management is vital as Australian cities strive to develop in a sustainable manner. In urban catchments, road surfaces can account for up to 25% of impermeable surfaces i.e. pavements are a major generator of runoff. One way to control this runoff is to use permeable paving. This concept of using the pavement itself to control runoff and retain or detain infiltrated water provides a powerful argument for using permeable paving in highly urbanised societies where urban consolidation is placing ever increasing demands on existing and often barely adequate stormwater infrastructure. This infrastructure is often already at or near full utilisation.

Water Sensitive Urban Design (WSUD) is a relatively new systems approach to managing urban water in an environmentally sustainable mode (Argue, 2004). WSUD includes aspects of water quality, quantity and reuse but, to date, the main focus of WSUD has been stormwater management from a water quality perspective. Permeable paving provides technologies that are capable of providing multi-purpose benefits for managing stormwater runoff at source. Permeable paving systems form part of the general infrastructure landscape considerations that need to be considered in WSUD (Beecham, 2003).

Awareness of environmental issues associated with stormwater runoff is prevalent across many sectors of the community and government. The industry and approving agencies have demonstrated that support already exists for the uptake of technologies and measures that are aligned with the environmental objectives that permeable paving can provide. However, permeable paving uptake has been limited in Australia, mainly due to lack of awareness amongst relevant sectors involved in the construction and design/approval process for pavements. Moreover, it conflicts with long entrenched engineering beliefs that water must be kept out of pavements wherever possible because it will lead to unacceptable performance in service or, indeed, outright failure.

Lifting awareness can be achieved by providing the information and tools for the industry that allows for appropriate design and/or assess permeable paving systems for a range of applications. To design permeable pavements several general methods using nomographs have been published (e.g. Smith, 2001, Interpave, 2005) and software based on the US Environmental Protection Agency stormwater management program, SWMM, exists for one

proprietary permeable paving system (James and von Langsdorff, 2003). However, such procedures are generally limited to flood mitigation. In the context of WSUD requirements, pollution control and water reuse also need to be considered. This is best achieved by specially written software which will handle all the various generic permeable paving systems. In 2006, the Concrete Masonry Association of Australia commissioned the School of Natural and Built Environments at the University of South Australia in conjunction with the senior author to develop new software called PERMPAVE for permeable pavements. This was published in 2007 and dovetails with existing structural design software for concrete segmental paving, LOCKPAVE, to provide an integrated approach to designing permeable interlocking concrete pavements. This paper describes the background and underlying technology of this new design software.

TECHNOLOGY

For permeable paving, the role of the pavement designer needs to expand to consider environmental and sustainability issues. The US Environmental Protection Agency has listed unfamiliarity by pavement engineers with the concepts of permeable paving as an obstacle to the wider adoption of such techniques. It is significant, therefore, that the countries that are most advanced in the use of permeable paving are those such as Germany, Austria, Canada, the UK, Australia and the USA that have invested in fundamental research into permeable paving. Such research normally includes pollution, infiltration and stormwater management studies. These have been supplemented by studies of structural performance in Australia, Austria and the UK.

In Australia, at least seven permeable paving systems have already been evaluated to varying degrees. The most comprehensive and sustained Australian research into permeable interlocking concrete pavements has been conducted at the University of New South Wales (UNSW) since 1994 and, more recently, at the University of South Australia (UniSA). At UNSW the research has concentrated on laboratory studies of water infiltration through permeable pavements (Shackel 1996a, 1996b, 1997; Shackel and Pearson, 1996), the structural capacity of permeable pavers (Shackel, 1996, 1997, 2001; Shackel et al., 1997, 2000) and the properties of base materials for permeable pavements (Shackel at al., 2001). This work has been extended to full-scale field studies with emphasis on water quality and pollution control (Shackel et al., 2003). At UniSA both laboratory and field trials have been conducted with emphasis on pollution management (e.g. Anon 2002, Rommel et al., 2001). The UNSW and UniSA studies have shown that permeable pavements can accept rainfall intensities exceeding 600 l/sec/ha whilst maintaining levels of structural capacity that are comparable with those exhibited by conventional paving. Moreover, there is good evidence that permeable pavements can trap up to about 90% of particulate contaminants (Anon 2002, Rommel et al., 2001).

Permeable Concrete Segmental Pavements comprise concrete pavers overlying fully engineered permeable base and sub-base and the designer needs answers to the following questions:

1. What pavers and pavement materials are suitable for use in permeable pavements?
2. How can the pavers and pavement materials be characterised for design purposes?
3. What design methodology should be used?
4. What levels of stormwater management and structural performance can be achieved?

Materials

Pavers Bedding and Jointing Materials

One of the first questions that a designer must address is the choice of paver. Pavers which allow water to infiltrate have been described in detail elsewhere (Shackel, 1996a). Not all pavers are equally efficient at infiltrating water and in resisting traffic loads and repetitions. Based on published infiltration and structural data it is possible to classify pavers into five groups and to rank their suitability for carrying various traffic intensities. Details of this

classification have been given elsewhere (Shackel, 2006) and have been made an integral part of the design software.

Both infiltration and structural tests of a wide range of permeable pavers have been reported (Shackel, 1996a, 1997, 2001; Shackel et al., 1996, 2000). Bedding materials ranging from conventional bedding sand to 10mm aggregates have been evaluated. It has been found that the best compromise between high water infiltration and good structural performance comes from the use of a clean 2-5 mm aggregate (Shackel et al., 1996). This can often be used for both bedding and jointing the pavers and, thereby, simplifies construction.

Base and Sub-Base

The base and sub-base materials for permeable pavements should meet the following criteria:

1. The materials should possess adequate water storage capacity and be able to drain water within a reasonable period of time without erosion or migration of fines.
2. The materials should possess adequate stiffness to carry the full spectrum of traffic loads and repetitions.
3. The materials should be capable of trapping and removing contaminants from water draining through the pavements
4. The materials should satisfy filter criteria which prevent movements of fines between the bedding and base, base and sub-base or base/sub-base and subgrade.

Materials meeting these criteria include unbound granular base, cement treated base, lean concrete and porous asphalt. To date the most widely used bases for permeable pavements have been unbound granular although Australian research has shown that cement bound materials offer promising alternatives (e.g. Zhuge and Hazell, 2007).

Once water has saturated the pavers and bedding, any additional water than can be accepted by the pavement depends upon the permeability and storage capacity of the base and sub-base. The amount of water that can be retained or detained within a pavement depends on the voids ratios of the base and sub-base materials. As broad generalisations the permeability and water storage capacity of unbound granular materials increase with increase in the uniformity and maximum size of the material. In practice most permeable pavements constructed to date have used large sized, open graded permeable granular base, sub-base or drainage layer materials such as rail ballast or similar materials with void ratios of around 40%. Such materials are however, quite unsuitable for pavements which must carry trucks or other significant traffic. Accordingly, there is a need to develop new materials that combine high permeability with good structural properties. At UNSW research has been conducted into the effects of changes in the grading of a crushed rock upon both the permeability and stiffness of the materials under laboratory conditions (Shackel, 2001). The material selected for study was a 20 mm crushed rock (DGB20) widely used for pavement construction in the Sydney region. The material was tested both as delivered and after removal of the material finer than either 0.600 mm or 1.18 mm. The gradations from which the 1.18 mm and 0.600 mm had been scalped were also tested after removal of particles bigger than 13.2 mm. Scalping out the fines led to reductions in both the modified Maximum Dry Densities (MDD) and the corresponding Optimum Moisture Contents (OMC) irrespective of the maximum particle size.

The mechanical properties of the various materials were assessed by repeated loading triaxial tests under fully saturated conditions using specimens that were 150 mm in diameter and 300 mm high. Compaction was adjusted to achieve not less than 96% of the modified MDDs. Unlike earlier studies of resilient moduli (e.g. ARI, 2005), care was taken to saturate the specimens prior to testing because permeable pavements, in contrast to conventional pavements, must be designed to perform in saturated conditions for much of their service lives. The specimens were saturated using back-pressure techniques. Specimen conditioning and resilient modulus testing were performed in accordance with Australian Standard AS1289.6.8.1 whilst the permeabilities of the materials were obtained using a 190 mm diameter rigid wall falling head permeameter (Shackel et al., 2001).

The test gradings were characterised in terms of the Coefficient of Uniformity, C_u. As might be expected, the permeability decreased significantly with increase in C_u. In other words, the more uniform the material the greater the permeability. The materials with all fines smaller than 1.18mm scalped out exhibited permeabilities almost 100 times greater than the unmodified material. Similarly, the materials with the fines smaller than 0.600mm removed exhibited about a forty-fold increase in permeability. In this respect, the materials having a maximum particle size of 13 mm exhibited slightly smaller values of permeability at a given value of C_u than the 20 mm material.

Overall, it was clear that simple measures such as scalping out fines could greatly increase the permeability of the materials. The question remaining was the extent to which the mechanical properties might be adversely affected by such removal of fines. For convenience, the Resilient Modulus, M_r, was selected as the parameter that would best describe the mechanical properties. Values of M_r have been published elsewhere. For permeable granular base materials values of M_r ranging between about 250 MPa and 550 MPa can be assumed for materials near OMC with the range of values decreasing to between about 250 MPa and 400 MPa at high saturations > 90% (e.g. Shackel, 1973, Shackel et al., 2001). These values are stress dependent and due allowance for this must be made during structural design. This can best be achieved by using computer-based mechanistic design analyses (Shackel, 2000).

The response of the materials to repeated triaxial loading depended primarily upon the degree of saturation ruling during the test and on the particle size distribution. Irrespective of the repeated stress levels, the Resilient Modulus decreased with increase in the degree of saturation. In general, an increase in saturation led to reductions in M_r between about 40% and 70% depending on the gradation and maximum particle size.

For the materials studied, the Resilient Modulus, M_r, increased with increase in C_u. The tests showed that the permeability of a typical crushed rock base material could be increased by up to two orders of magnitude by scalping out the finer fractions of the material. This was accompanied by a reduction in M_r. Removing material smaller than 1.18mm reduced M_r by between approximately 30% and 55% whereas scalping just material smaller than 0.600mm caused modulus reductions between about 20% and 45%. In other words, the choice of unbound material for permeable base must be a compromise between high permeability and low modulus (low structural capacity).

Overall, the tests showed that it is feasible to manufacture highly permeable base materials by the simple expedient of scalping out some of the finer fractions of material. However, for design purposes it would be prudent to assume that the resilient moduli, M_r, of such scalped base materials would only be about half those normally used in mechanistic pavement analysis and design. The scalped materials exhibit voids ratios of about 15% i.e. much less than the voids ratios of up to 45% typical of the uniform materials hitherto used in many permeable pavements. This means that their water storage capacity is much less than for uniform materials and this must be considered in design.

DESIGN OF PERMEABLE PAVEMENTS

Several distinct needs must be addressed in the engineering design of permeable pavements. Ideally the methodology should embrace one or more of the following objectives:

1. Flood mitigation by retention or detention i.e. water quantity.
2. Water quality improvement by filtration or retention i.e. water quality.
3. Water conservation by collection and re-use i.e. water harvesting.
4. The ability to carry the intended traffic.

This means that, in contrast to conventional pavements, the design of permeable pavements involves two parallel processes. As shown in Figure 1, these comprise structural design accompanied by design for stormwater management. Each of these procedures will require different design thicknesses of pavement. Clearly, the final design will be the greater of these thicknesses.

The principal design questions are:

1. What is the design life of the pavement?
2. How fast can the pavement accept incident rainfall and additional runoff? This depends on the paver type, the crossfall, the bedding and drainage materials and the type of base and sub-base.
3. How fast will pavement drain? This is related to the type of base and sub-base, the infiltration properties of subgrade the position of the water table and pipe drainage (if any)..
4. How much water can the pavement retain and for how long i.e. what is its capacity to manage significant rainfall events? These questions depend on the thickness and permeability of the pavement layers.
5. How thick should the pavement be to carry traffic? Here the resilient moduli of the permeable pavement materials are paramount.

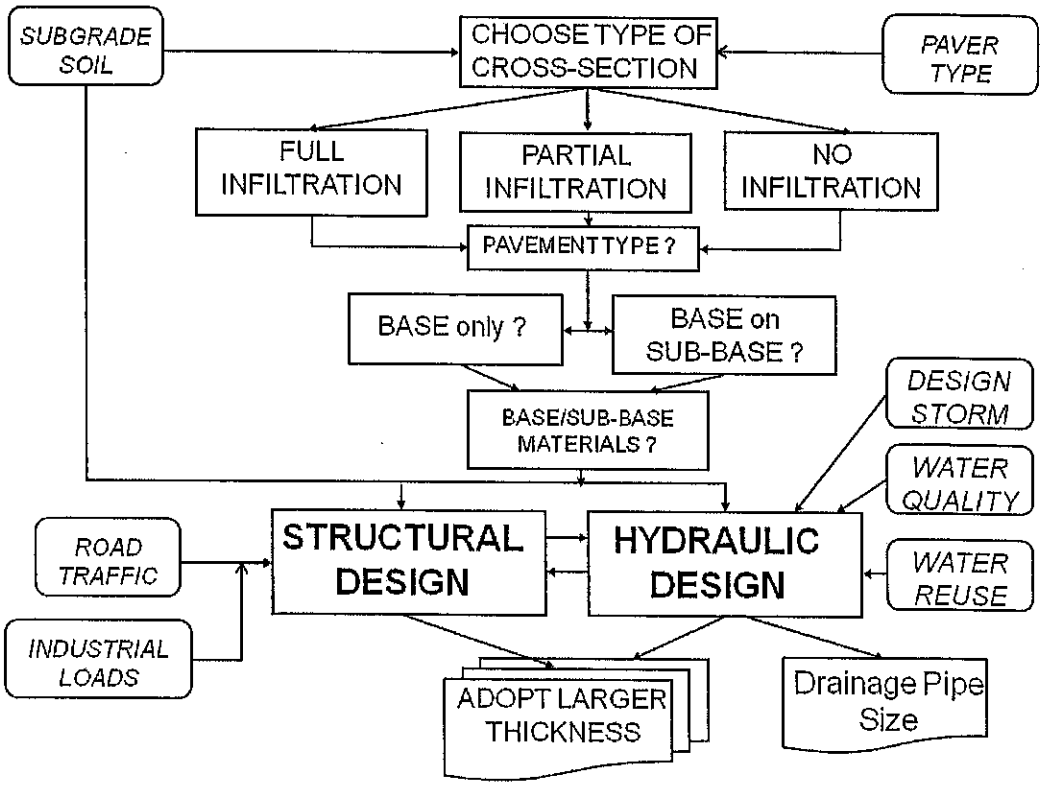

Figure 1: Recommended methodology of permeable pavement design

Design life

A major advantage of permeable pavements is that they can trap around 90% of total suspended solids (TSS) i.e. particulates. Research shows that gradually over time these particulates accumulate in the pavement and that consequently the pavement slowly clogs. Experimental work at UniSA has established that effective lives between 15 and 25 years are feasible (e.g. anon 2002). Moreover, it has been shown that much of the clogging occurs in the jointing materials from whence it can be easily and economically removed (Shackel, 2005, Dierkes, 2002, James, 2002, James and von Langsdorff, 2003). Based on these studies it appears reasonable to adopt a 20 year maximum design life for permeable pavements.

Cross-section selection

As shown in Figure 1, the first step in permeable pavement design is to determine how the water will be controlled and managed within the pavement system i.e. to choose a cross-section and the pavement materials. Broadly three cases need to be considered:

1. Where the water infiltrating the permeable pavement is allowed to flow into the subgrade and thence to the water table. Here subsurface drains may sometimes be omitted. Some local authorities will not permit this and it is only feasible on permeable sandy soils.
2. Where the permeable pavement is founded on impermeable clay subgrades provision must be made to drain the water from the site using drainage pipes and a filter fabric must also be used to prevent clay fines contaminating the base and sub-base.
3. Where there are contaminated flows or issues of soil salinity. Here an impermeable liner needs to be placed between the permeable pavement and the subgrade and drainage pipes are required to remove infiltration.

Suitable cross-sections and design details for achieving these objectives are available (e.g. Smith, 2001; Interpave, 2005).

Water infiltration and treatment

Three issues must be considered in the design of pavements to handle water. These are

1. Stormwater Management i.e. how much water can the pavement infiltrate over a given time and where will it go
2. Pollution Control i.e. what will be the quality of the effluent leaving the pavement
3. Water Harvesting i.e. to what extent is it possible to store and reuse the water?

Stormwater management and flood mitigation

There are two methods for designing permeable pavements for flood control:

1. design storm approach; and
2. continuous simulation modeling using historical rainfall data.

Designing flood mitigation systems with the use of continuous simulation modelling is complex and does not yet form part of local government requirements in Australia. Therefore, PERMPAVE does not currently utilise continuous simulation for flood design. Rather, the program uses the design storm approach. In time, however, it is expected to move to continuous simulation modelling as local practice changes.

The design storm approach is in accordance with current standards specified by local councils and the Engineers Australia (EA) as outlined in the publication *Australian Rainfall and Runoff: A Guide to Flood Estimation* (1999). This is the industry standard for stormwater management professionals and provides the guidelines and methods for stormwater drainage design in Australia. It should be noted that this publication has been developed for stormwater conveyance systems with no significant storage. However, it does include procedures for flood detention. ARR procedures are not generally suitable for infiltration system design. However UniSA's Centre for Water Management and Reuse (CWMR) has developed simple methods which are included in the document, *Australian Runoff Quality* derived from continuous simulation modelling that can be incorporated into standard design procedures within ARR (Argue and Pezzaniti, 2005).

Briefly, the design storm approach involves the use of local average design storm intensity bursts for a particular Average Recurrence Interval (ARI). A storm temporal pattern can be applied to the average storm intensity to provide a rainfall distribution pattern over a period of time. The rainfall distribution pattern is particular to the zone location in Australia.

The majority of Australian drainage infrastructure has been designed using this type of information. For this reason the new software is consistent with accepted Australian practice including AUSTROADS recommendations.

Hitherto most analyses of permeable pavements have concentrated on analysing retention and/or detention of stormwater within the boundaries of the permeable pavement site. However, detention must be integrated with overall catchment management in terms of runoff and water quality i.e. permeable pavements should not be considered as stand-alone projects. Catchment management involves consideration of the catchment as a whole. Catchments may be large e.g. an entire suburb and permeable pavements are just elements within the catchment. The critical locations at which local authorities mandate flow and/or water quality requirements are normally some distance away from the permeable pavement. Therefore, the critical factor is how the permeable pavement impacts upon the entire catchment not just its immediate locality i.e. downstream effects must be considered. This means that stormwater management software must calculate retention and detention, predict outflows and/or drainage times (emptying) and also must provide data to model a node in existing catchment management procedures and software. Similarly, if municipal engineers are to adopt the design software, it must be capable of predicting water quality or of working with other water quality software programs.

To date most stormwater management methods for permeable pavements have used the Design Storm Method based on statistics of historical rainfall records. Arbitrary assumptions about the state of storage in the pavement e.g. empty or half-full at commencement of design storm must be made. The alternative is to use the Modified Design Storm Method which considers drainage (emptying) time, emptying by either infiltration/percolation or hydraulic abstraction e.g. drainage pipes. The following inputs need to be considered for the pavement:

- effective area 'connected' to the permeable paving system
- proposed area of the permeable paving system
- impervious area not draining to the permeable paving
- pervious area not draining to the permeable paving
- permeable paving storage
- storage media porosity
- soil saturated hydraulic conductivity
- infiltration clogging
- drainage outlet discharge characteristics.

Storm data include:

- Average Recurrence Interval (ARI)
- critical storm duration(s)
- temporal zone
- average storm intensity
- antecedent condition (e.g. part-full with stormwater?).

Water quality, harvesting and reuse

In PERMPAVE, water quality and harvesting/reuse analysis is undertaken using a simplified approach. Hydrological effectiveness curves developed from continuous simulation modelling by Argue and Pezzaniti (2005) have been incorporated into the software code. These curves apply to each Australian capital city. A simple pollutant removal algorithm is included, based on typical runoff pollutant event mean concentration removal rates. Further program development is planned that will allow users located outside the Australian capital cities to input local rainfall data.

Two approaches to controlling water quality can be identified. The first of these is to filter the stormwater and then release it to the local government drainage system. The second is to filter and retain the stormwater on-site, allowing it to slowly percolate to the underlying soil. Factors that must be considered include:

- input pollutant concentration characteristics
- pollutant removal efficiency characteristics
- historical rainfall data
- 'first flush' pollutant characteristics
- build up/wash off of pollutants

For water harvesting (reuse) it is also important to consider the demand characteristics.

Water management outputs

The range of water management outputs offered by PERMPAVE include:

1. Storage size requirement to achieve specified performance targets
2. Peak flow rate for selected storm events at the site
3. Site critical storm duration
4. Average annual reduction in pollutant load
5. Average annual harvesting/reuse capability

Structural design

The pavement thicknesses required for stormwater management will normally be different from those needed to carry traffic. This means that, in addition to water management, it is necessary to consider the structural design of the pavement. Permeable pavements have already been successfully used in projects ranging from car parks to roads, ports and container yards. Accordingly, any structural design procedure should be capable of handling both a wide range of loading conditions and the full range of new materials needed for the construction of permeable pavements. Mechanistic pavement design software for achieving this already exists. For example, the LOCKPAVE software, long used in Australia and many other countries around the world, can model permeable pavers and permeable base and sub-base materials (Shackel, 2000). In this program resilient modulus data such as those summarised above for base materials can be used for the design of permeable pavements and many different types of concrete paver can be considered. This mechanistic methodology therefore is complementary to the water management methods that are modelled in the PERMPAVE software.

One problem facing the designer of permeable pavements is to choose the moisture content at which the base and sub-base materials must serve because this affects the stiffness, M_r, of the materials. As noted above, M_r falls with increase in saturation yet most studies of M_r have been reported for relatively dry conditions close to OMC. General published relationships between M_r and moisture content for base and sub-base (AUSTROADS, 2005) show that, at high moisture contents, M_r values may be only 50% or 60% of those customarily used in mechanistic pavement design for materials meeting current base or drainage layer specifications. As noted earlier, similar reductions in M_r are appropriate when using scalped granular base materials (Shackel et al., 2001). In the absence of M_r values that have been measured at high saturations it is prudent for the designer to choose M_r values that are typically only about half those routinely adopted.

The use of lower M_r values than are commonly selected for the structural design of conventional pavements will lead to some increase in base or sub-base thicknesses for permeable pavements compared to concrete segmental paving (CSP). However, as noted above, the final design thickness for a permeable pavement is the greater of the thicknesses need for stormwater management and for carrying traffic. In the author's experience the thickness

needed for water runoff management is often greater than that needed for traffic. This means that there is usually no economic disadvantage in requiring greater structural thicknesses for permeable pavements than for conventional CSP because stormwater considerations often determine the final design. However, it would be unwise to assume that this will always be the case, especially where heavy traffic must be carried. Accordingly, the stormwater design should always be accompanied by a structural analysis.

APPLICATION OF PERMEABLE PAVING

An interesting finding to emerge from the worldwide research into permeable pavers is that, structurally, their performance is similar to that of conventional segmental paving. This means that permeable pavers have the potential to be used in many types of application where conventional segmental paving has already become well established. Examples of permeable paving around the world include footpaths and pedestrian plazas including large areas at the Sports Ground and the Olympics Precinct in Sydney.

Car parks, often combined with bio-swales, have become a major application of permeable paving worldwide. Figure 2 shows the bus and car parking area at the Prater Stadium, Vienna. This was installed by machine in 1990 and has an area of 39 000 sq m. A good recent example is the Morton Arboretum in Chicago shown in Figure 3. Here, as shown in Figure 3, the parking area is bisected by bio-swales to take excess runoff from rainfall events exceeding the design storm.

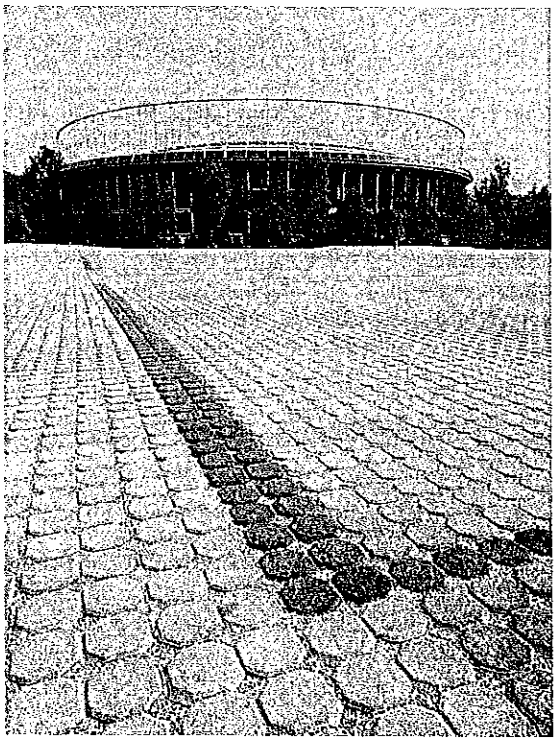

Figure 2: Permeable Paving for Buses and Cars at the Vienna Football Stadium

Figure 3: Permeable paving (2 ha) at the Morton Arboretum, Chicago

The location of permeable pavements in urban and high population density areas should avoid underground services such as telecoms and power because of the need for frequent trenching and reinstatement. Consideration should also be given to the local vegetation. Decomposing leaves can generate organic matter, as well as elevated nutrient loads. The nutrients are generally beneficial for permeable pavements as they stimulate microbial activity and this leads to accelerated hydrocarbon removal. However, the organic matter can cause clogging and therefore it is recommended that deciduous trees not be planted in close proximity to permeable pavements. Subject to such provisos, roadways and residential streets are rapidly becoming a staple use of permeable paving in the UK, Europe and Australia (e.g. Figures 4 and 5). Design, construction and performance details have been given elsewhere (e.g. Shackel et al., 2003).

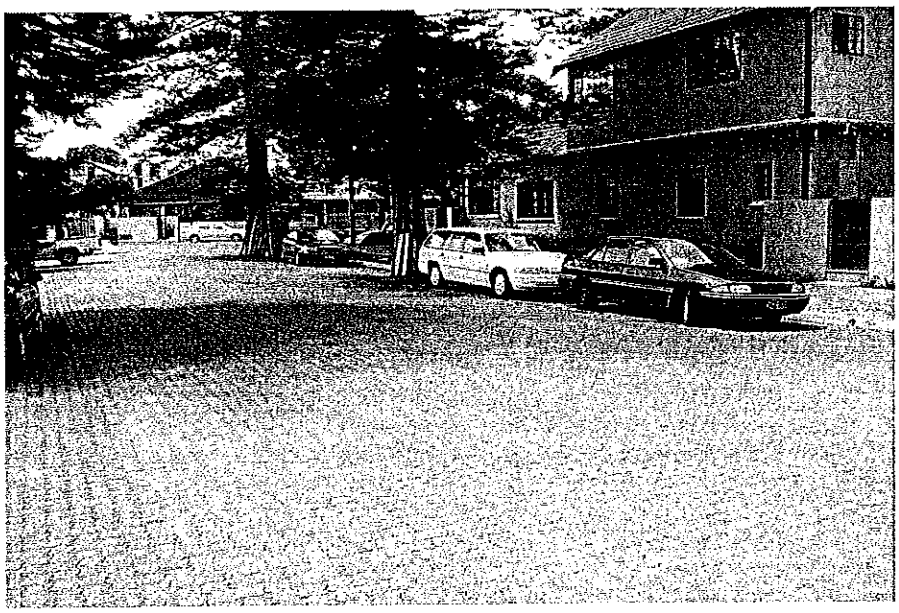

Figure 4: Smith Street, Manly - an Australian retrofit of permeable paving to a residential street originally constructed around 1900

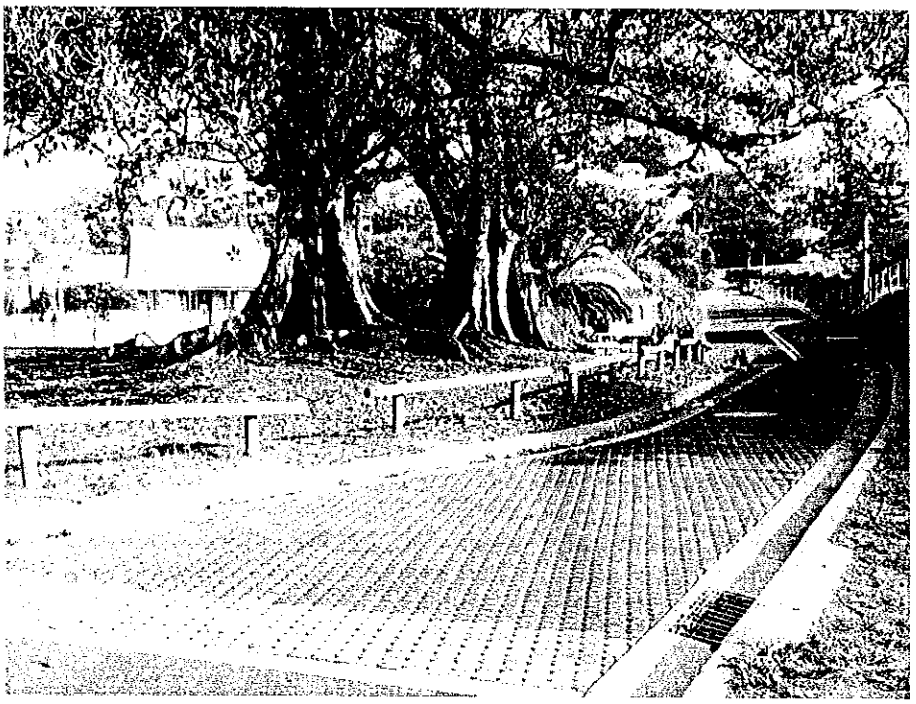

Figure 5: Permeable paving of a street in Kiama, NSW, Australia

In Europe and North America, factory and truck loading areas increasingly use permeable paving to achieve both environmental and land use/cost benefits. In both the USA and Brazil permeable paving has been successfully used in container handling areas and ports subject to high wheel loads (e.g. Knapton and Cook, 2000; anon 2002b). An example of a container yard is shown in Figure 6.

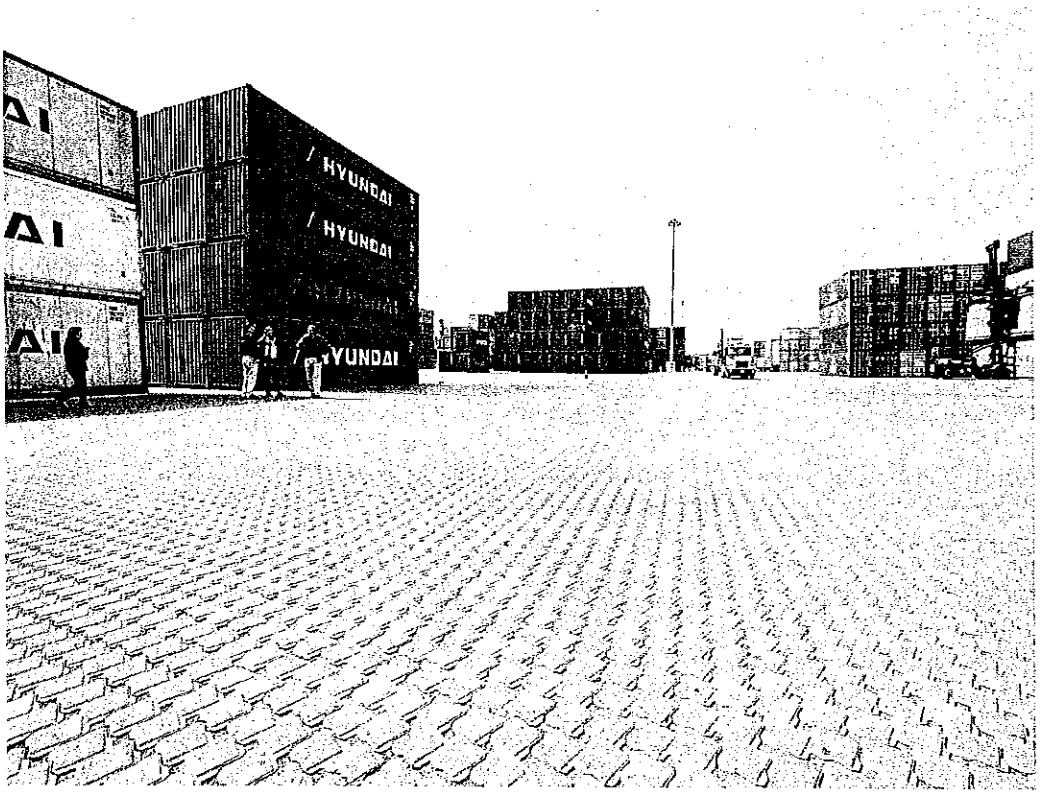

Figure 6: Permeable paving at the Howland Hook Container Yard, NY, USA

CONCLUSIONS

As noted above, the use of permeable pavements is increasing rapidly worldwide, with applications ranging from car parks to container yards (Shackel, 2005; Shackel and Pearson, 1996). Despite this, pavements remain an intrinsic, seldom-thought-about part of life, particularly in urban areas. However, for developers, industrial facilities, and local authorities addressing stormwater and associated water-quality guidelines and regulations, pavements stay very much at the forefront of planning issues.

Permeable pavements provide an at-source stormwater management tool. When applied correctly, they can help to accomplish the aims of Water Sensitive Urban Design that are outlined above. Permeable pavements allow stormwater runoff to pass through the pavement surface to the underlying structure where it may be either detained prior to infiltration, or retained for reuse. This contrasts with traditional pavement design techniques which normally seek to prevent any ingress of water into a pavement. Here it is important to note that when moisture penetrates a conventional pavement it usually represents some failure or deficiency in the surfacing or drainage which was not envisioned during design whereas permeable pavements are designed on the explicit assumptions that they will freely admit water and will have to serve satisfactorily with water present for long periods. This requires new design procedures and requires a designer to consider many additional factors which may be relatively unfamiliar in current pavement design. The methods and software described here are intended to facilitate transition to the new methodology. The PERMPAVE software is designed to co-exist with the catchment management and water quality software that is already in widespread use in countries applying the principles of sustainable water sensitive urban design. Moreover, it complements existing structural design software that is already in widespread use for the mechanistic design of roads, heavy duty, port and industrial paving.

The software draws on the testing of permeable systems and materials that has now been going on for more than 25 years. In Australia alone, more than seven different systems have been evaluated since the early 1990's. Much of this research has concentrated on the pavers and their bedding and jointing materials and extensive information is available on both the hydraulic and structural properties of the pavers and bedding courses as well as on permeable base and sub-base materials.

REFERENCES

Anon. (2002b). Permeable Pavements Now in First Port Application. Interlocking Concrete Pavement Magazine. August, pp 6-9.

Anon (2002a). Research into "Effective Life" of Permeable Pavement Source Control Installations. Urban Water Research Centre, Division of IT, Engineering and the Environment, University of South Australia. Final Rpt Project 07 67680, June.

Argue J.R. Ed. (2004). WSUD: Basic Procedures for Source Control of Stormwater – A Handbook for Australian Practice. UniSA/Australian Water Assn.

Argue, J. & Pezzaniti, D., 2005, Chapter 11 - Infiltration Systems, IN WONG, T. H. F. (Ed.) *Australian Runoff Quality,* Institution of Engineers, Australia, Sydney.

ARI - Applied Research Associates Inc. (2005). Repeated Modulus Testing of Open Graded Drainage Layer Aggregates. Rpt to Interlocking Concrete Paver Institute, Washington, DC.

AUSTROADS (2004). Pavement Design – A Guide to the Structural Design of Road Pavements. AUSTROADS, Sydney

Beecham, S., Water Sensitive Urban Design: A Technological Assessment, 2003, *Waterfall,* Journal of the Stormwater Industry Association, Vol. 17, pp5-13.

Dierkes C, Benze W and Wells J. (2002). Sustainable Urban Drainage and Pollutant Source Control by Infiltration. Proc. Stormwater Industry Assn Regional Conf. Orange.

INTERPAVE (2005). Permeable Pavements – guide to the design, construction and maintenance of concrete block permeable pavements, Edition 3. Interpave, UK

I.E.AUST. (1999). Australian rainfall and runoff – a guide to flood estimation. 3rd edition, Vol. 1, ISBN 185 825 6878.

James, W. (2002). Green Roads: Research into Permeable Pavers, Stormwater Vol. 3, No. 2.

James W. and von Langsdorff H. (2003). The Use of Permeable Concrete Block Pavement in Controlling Environmental Stressors in Urban Areas. Proc. 7th Int. Conf. on CBP, South Africa.

Knapton J and Cook I D. (2000). Permeable Paving for a New Container Handling Area at Santos Container Port, Brazil. Proc.6th Int. Conf. on Concrete Block Paving, Tokyo.

Rommel, m., Rus, m., Argue, j., Johnston, I. & Pezzaniti, D., 2001, 'Carpark with "1 to 1" (impervious/ permeable) paving: performance of "Formpave" blocks', *Proceedings of Novatech 4th Int. Conf. on Innovative Technologies in Urban Storm Drainage,* Lyon, France.

Shackel B (1973). Repeated Loading of Soils – A Review. *Aust. Road Research.* Vol. 5 No 3.

Shackel B. (1996a). *Handbuch Betonsteinpflaster.* Beton-Verlag, Dusseldorf (1996) 216pp

Shackel B. (1997). Water Penetration and Structural Evaluations of Permeable Eco-paving. Betonwerk und Fertigteil-technik Vol 63, No3, March, pp110-119 ISBN 0373-4331

Shackel B. (2000). Computer-Based Mechanistic Methods For Concrete Block Pavement Design. Proc. 6th Int. Conference on Conc. Block Paving. Tokyo.

Shackel B. (2001). Laboruntersuchungen An Pflastersteinen fur Bemessungszweike und Verleichende Analysen. Festschrift, Institut fur Strassenbau und Strassenerhaltung., Technische Universitat, Wien Heft Nr 12, Oct, pp116-129. ISBN 3-901912-11-8.

Shackel B. (2005).Worldwide Progress in Permeable Paving. Pave-It, No.5, Interpave, UK

Shackel B. (2007) Design Of Permeable Paving Subject To Traffic., Proc. 8th Int. Conf. on Concrete Block Paving. San Francisco. Nov.

Shackel B (1996b). Permeable Eco-paving - An Environmental Option for Stormwater Management. Proc 4th Annual Conf. Soil and Water - Management for Urban Development. Sydney, pp 97-105.

Shackel B, Ball J and Mearing M. (2003). Using permeable eco-paving to achieve improved water quality for urban pavements. Proc 8th Int Conf on Concrete Block Paving, South Africa.

Shackel, B., Kaligis, S., Muktiarto and Pamudji. (1996). Structural and Infiltration Tests of Permeable Eco-Pavers. Proc. 5th Int. Conf. on Concrete Block Paving, Tel Aviv.

Shackel B, Jitakeerul P. and Prasetyo S.B. (2001). An Experimental Study of Unbound Base Material for Use in Permeable Pavements. Proc. 16th Conf. Australian Road Research, Melbourne.

Shackel B, Litzka J. and Zieger M. (2000). Loading Tests of Conventional And Ecological Concrete Block Paving. Proc. 6th Int. Conference on Conc. Block Paving. Tokyo.

Shackel B, O'Keeffe L, Gwynne P. W and Arisdianto I. (1997). Environmentally Sensitive Articulated Concrete Pavement. Proc. 6th Int. Conf. On Concrete Pavements, Indianapolis.

Shackel, B. and Pearson, A.R. (1996). Environmentally Sensitive Concrete Segmental Pavements Betonwerk + Fertigteiltechnik, Vol 62 No 10, October. pp 99-106 ISSN 0373-4331

Smith D. R. (2001). Permeable Interlocking Concrete Pavements. ICPI. 2nd Edition

Zhuge Y. and Hazell D. (2007). Development of Environmenatlly Friendly Permeable Concrete Pavement Base Course Using Recycled Materials. Proc. Concrete 2007, Adelaide

ACKNOWLEDGEMENT

The development of the PERMPAVE software was initiated and funded by the Concrete Masonry Association of Australia.

AUTHOR BIOGRAPHIES

Dr Brian Shackel has more than 46 years of professional engineering experience. He has conducted research into concrete block paving since the 1970's and is the author of numerous publications on this topic. His pioneering book "The Design and Construction of Interlocking Concrete Block Pavements" has been republished in German, Japanese and Hungarian editions. He has lectured on block paving in more than 25 countries and has acted as a consultant to major paving projects worldwide including roads, airports and container yards.

Prof Simon Beecham is Head of Civil Engineering at the University of South Australia and is leading their research in water sensitive urban design (WSUD). The outputs from his research include the SWITCH, Switch2 and Syfon computer models. Switch2 is one of Australia's first continuous simulation models for designing and sizing Water Sensitive Urban Design systems and is recommended in Engineers Australia's Australian Runoff Quality Manual. Since 1998, Simon Beecham has been Engineers Australia's representative on IWA's International Group on Urban Rainfall.

THE DESIGN, CONSTRUCTION AND EVALUATION OF PERMEABLE PAVEMENTS IN AUSTRALIA

Dr Brian Shackel, University of New South Wales, Australia.

ABSTRACT

Permeable pavements provide a sustainable engineering solution to many common urban engineering problems but require new approaches to design, materials selection and construction. After listing the advantages and limitations of permeable pavements, the paper describes the development and implementation of a new design methodology for permeable pavements specifically tailored to Australian conditions which is based on research conducted both in Australia and overseas. The construction requirements implicit in implementing such designs are discussed with particular reference to materials selection and in-service performance. Methods for characterising such materials are then summarised. Finally, the utility of permeable pavements is critically assessed by reference to in-situ measurements of the performance of a series of permeable pavements in New South Wales and South Australia which are currently carrying traffic and which have served for periods of 8 to 10 years.

INTRODUCTION

In urban catchments, pavements can account for up to about 25% of impermeable surfaces i.e. pavements are a major generator of runoff. One way to control this runoff is to use permeable pavements. Although by training engineers are customarily inclined to make all pavements impermeable, nevertheless permeable paving offers significant benefits over conventional pavements in terms of sustainability, environmental impact and project cost. Permeable pavements can achieve the following objectives (Shackel, 1996a, 1996b, 2005).

1. To reduce the amount of rainfall runoff from pavement surfaces and, thereby, to eliminate or minimise the extent of the stormwater drainage system. As noted below this can lead to substantial savings in the overall project costs.
2. To reduce the size or need for rainwater retention facilities in roadworks by using the pavement itself for retention. This improves land use.
3. To reduce or avoid downstream flooding.
4. To recharge and maintain aquifers and the natural groundwater.
5. To trap pollutants that would otherwise contaminate groundwater or drainage systems.
6. To assist in the biological decomposition of hydrocarbon contaminants.

Permeable surfacings include porous asphalt and concrete where water passes through the pores of the surfacing itself or Permeable Interlocking Concrete Paving (PICP) where openings or joints between individual interlocking concrete pavers facilitate infiltration. Although often more costly as a surfacing, PICP offers some advantages over porous asphalt and concrete. These include achieving high infiltration rates which are more than sufficient to handle the design storms encountered across Australia, and that clogging is easily remedied. Whilst many of the principles discussed below apply to all forms of permeable pavement, the main emphasis in this paper is on PICP. A cross-section through a typical PICP is shown in Figure 1. This figure shows pavers provided with opening or drainage voids at intervals along the joints. These voids are filled with a uniform 2 – 5 mm aggregate to facilitate rapid infiltration of rainfall. The same aggregate can be used as a bedding material for the pavers.

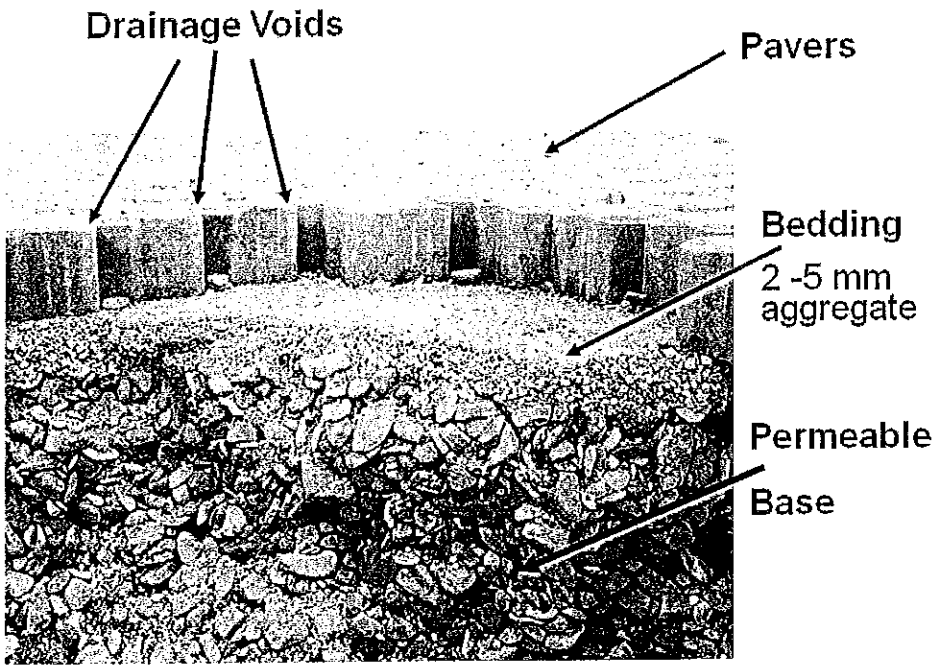

Figure 1: Typical PICP Cross-section

PICP concepts only began to emerge in Germany and Austria some 25 years ago but subsequently spread rapidly throughout the UK and Europe, Australia, Japan, the Americas and South Africa to become a viable option for sustainability worldwide. Originally in Europe, permeable paving was seen principally as a means of flood mitigation and control. This concept remains a powerful argument for using permeable paving in highly urbanised societies such as Australia where urban consolidation is placing ever increasing demands on existing and often barely adequate stormwater infrastructure.

Almost invariably, the uptake of permeable paving has been a reaction to regulations for achieving sustainability and managing the environment. For example, the UK concept of Sustainable Drainage Systems (SUDS) and its Australian equivalent, Water Sensitive Urban Design (WSUD) both aim to manage stormwater and pollution at either the site level or on a regional basis (e.g. Pratt, 2001; Argue, 2004). As such they are referenced by planning guidelines and drainage regulations and provide a rational framework for incorporating permeable paving into urban design. Pollution control has also provided a strong incentive for adopting PICPs. In the USA, the Environmental Protection Agency (USEPA) places its main priority on controlling stormwater pollution and has required developers of projects greater than 0.4 ha (1 acre) in size to apply for permits specifying Best Management Practices (BMP) for stormwater runoff management. Structural BMPs approved by the USEPA include permeable paving (USEPA, 2007).

Engineers often perceive cost to be a major obstacle to adopting PICP. Although the cost of a PICP surface may be greater than, for example, an asphalt surface, experience in the Northern hemisphere and recent studies in the UK have shown that PICP gives significantly lower initial and whole-of-life project costs than asphalt or cast in place concrete pavements (Interpave/Scott Wilson, 2006). This is principally because of the reduction or elimination of sub-surface drainage infrastructure. Moreover, concerns about the long term maintenance costs of permeable paving due to clogging have largely been allayed by tests in Europe, North America (e.g. James and von Langsdorff, 2003; Borgwardt 2006) and, as noted below, Australia. These indicate that permeable paving can achieve service lives of 15 to 25 years without the need for anything other than routine maintenance.

DESIGN REQUIREMENTS

Permeable pavements must be designed not only to carry traffic but also to manage runoff, infiltration, pollutant transport and, where appropriate, water harvesting. They, therefore, present new technical problems and challenges to pavement designers that are not covered by conventional pavement design methods. In particular the selection, specification and characterisation of the materials used in the surface, base and sub-base of permeable pavements require designers to modify existing design methodologies to facilitate water movement through the pavements whilst maintaining satisfactory serviceability under traffic in saturated conditions and to provide adequate water storage where required. Essentially, as shown in Figure 2, engineers need to go through three design stages. These comprise:

1. The choice of the pavement surfacing, cross-section and materials.
2. A hydraulic analysis leading to the design of the thicknesses of materials needed for water management
3. A structural analysis of the pavement thicknesses needed to support traffic.

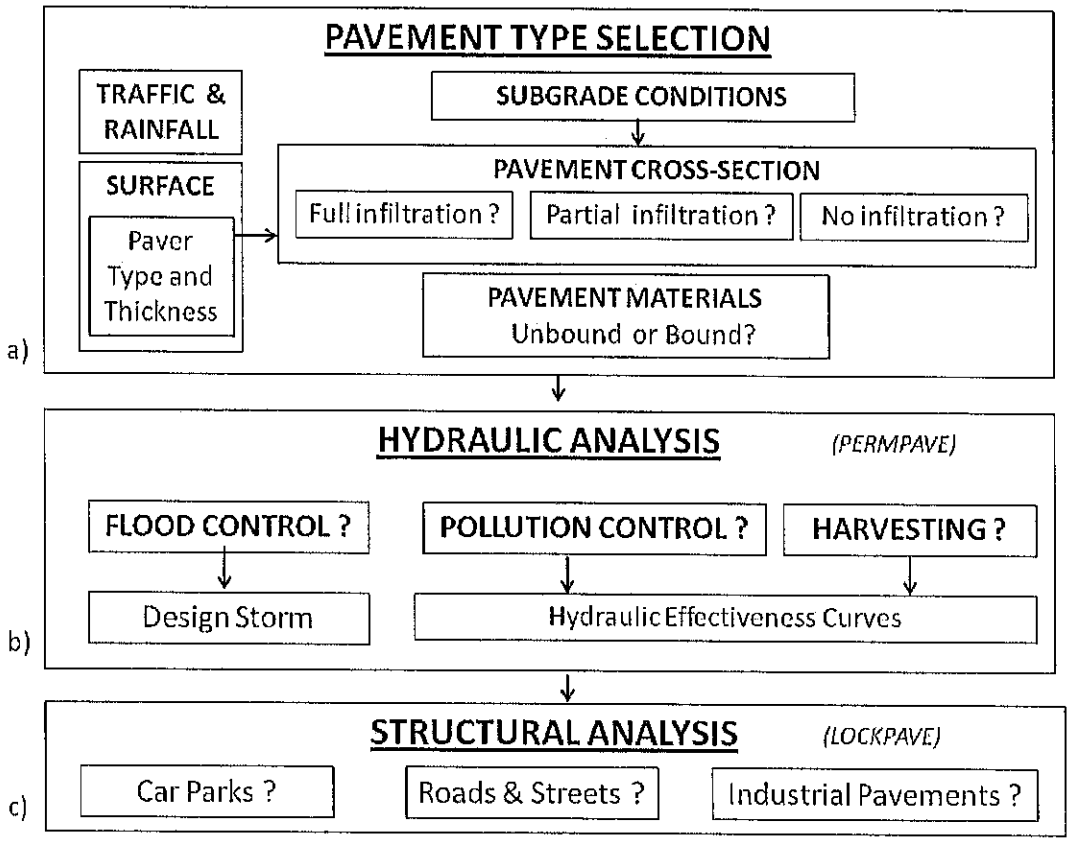

Figure 2: Overview of Permeable Pavement Design

It will be seen that the design of permeable pavements involves one additional step not considered in conventional pavement analysis i.e. stormwater management. Unfortunately the water management procedures required here are often unfamiliar to pavement engineers. For this reason, in 2006 the Concrete Masonry Association of Australia commissioned the School of Natural and Built Environments at the University of South Australia in conjunction with the author to develop new software called PERMPAVE for permeable pavements. This was published in 2007 and dovetailed with existing structural design software for concrete segmental paving, LOCKPAVE, to provide an integrated approach to designing permeable interlocking concrete pavements. Details of these programs have been given elsewhere (Shackel and Pezzaniti, 2009, 2010; Shackel, 2000). These programs draw on the extensive research that has been conducted into both the structural and water management characteristics of PICP in Australia (e.g. Shackel, 1996a, 1997; Shackel at al 1996, 2000; Urban Resource Centre, 2002)

and overseas as well as on-going local research into PICP basecourse materials (Shackel et al, 2001; Zhuge and Hazell, 2007; Oeser et al, 2009).

Pavement Type Selection

Choice of surfacing

Research has shown that the concrete pavers which form the surfacing of PICP differ in their structural capacity (Shackel et al, 1996, 2000) and their ability to infiltrate water (Borgwardt, 2006). In the case of structural capacity the prime determinants of performance are the paver shape, thickness and laying pattern (Shackel, 1996a; Shackel et al, 1996, 2000). Published guidance for paver selection for performance under traffic has long been available (e.g. Shackel, 1996a). For water infiltration there are data acquired from both laboratory tests (Shackel, 1997; Shackel et al 1996, Urban Water Resources Centre, 2002) and in-situ infiltration measurements on PICPs that have been in service for periods of up to about 20 years (Borgwardt, 1997, 2006). It is possible to classify pavers into five groups in terms of infiltration and to rank their suitability for traffic. These classifications (Shackel, 2006) have been made an integral part of the design methodology and software.

Subgrade conditions

The subgrade soil determines the type of pavement cross-section that is required to manage both the structural response to traffic and water management requirements. The possible cross-sections are shown in Figure 3. Contrary to some engineering misconceptions, PICP have been successfully constructed over all types of subgrade and not just over granular materials. Where the subgrade is a non-cohesive granular material it is usually possible to infiltrate fully all the design rainfall. However, for a cohesive clay subgrade only a small fraction of the stormwater runoff can be expected to infiltrate the soil i.e. only partial infiltration is feasible. In some cases, such as where the subgrade soil is contaminated, expansive or saline or where local regulations do not permit infiltration, an impermeable liner must be placed between the pavement and subgrade so that no infiltration is possible. In the cases of either partial or no infiltration, the pavement's main function is to detain the water temporarily and then to allow it to efflux via a carefully sized outlet pipe to the stormwater sewers at a rate chosen not to overload these facilities. Here, both the storage volumes of the permeable basecourse and bedding materials and the size of the drainage outlet must be designed together.

Choice of pavements materials

Criteria for the base and sub-base materials for permeable pavements have been discussed elsewhere (Shackel, 1997, 2006; Shackel at al,1996). Suitable materials include unbound granular base, cement treated base, lean concrete and porous asphalt. The most widely used bases for permeable pavements have been unbound granular materials although recent Australian research has shown that cement bound materials offer promising alternatives (e.g. Zhuge and Hazell, 2007; Oeser et al, 2009).

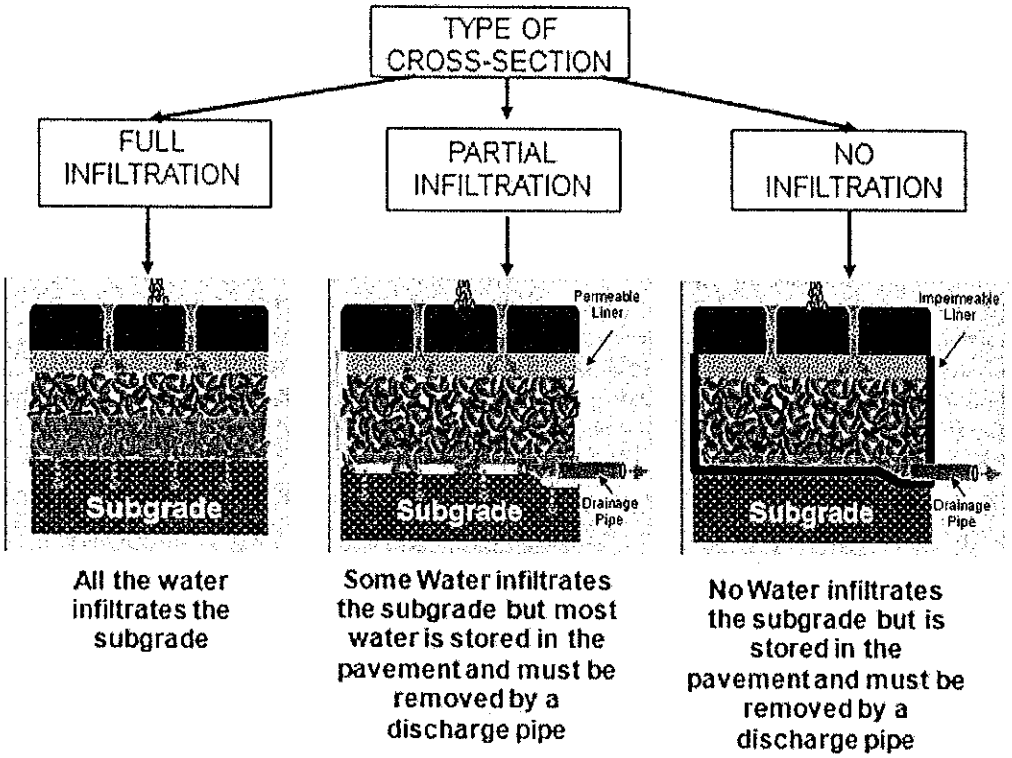

Figure 3. Permeable Pavement Cross-sections

Hydraulic Analyses

The hydraulic analyses are implemented by the PERMPAVE software referenced above. The important tasks implemented by this program are:

1. To calculate the capacity of the pavement to manage design rainfall events by infiltration to the subgrade or to the storm sewers i.e. Flood Control.
2. To determine the quality of the effluent leaving the pavement after removing pollutants i.e. Water Quality.
3. To determine the extent to which is it possible to store and reuse the water i.e. Water Harvesting.
4. To design the size of any drainage pipes connecting to the storm sewers.

Permeable pavements are capable of meeting multiple water management objectives. As described in detail elsewhere (Shackel and Pezzaniti, 2009, 2010) the PERMPAVE program operates in a step-by-step sequential mode for each of the flood, water quality and harvesting/reuse modules. Furthermore, each module operates independently of the others and hence, if a design requires a solution to achieve more than one objective, each of the relevant modules can be used separately.

For flood control the design storm approach as incorporated in standard design procedures (Engineers Australia, 1999; Argue and Pezzaniti, 2005) is used. However it is not feasible to design for water quality and harvesting using some particular nominated storm. Rather the pattern of rainfall needs to be modelled (simulated) over a substantial period of time. This can be achieved in an efficient manner by using the concepts of hydrological effectiveness curves developed by Argue and Pezzaniti (2005). Hydrological effectiveness curves are a representation of the performance of a system (incorporating storage and discharge features) to manage inflows such as runoff from a specified catchment. A continuous water balance simulation analysis is carried out using historical rainfall data for a particular geographical location. In most cases around 20 years of 6 minute interval rainfall data are needed to generate the hydrological effectiveness relationships. This is because, for small catchments, a short time step (6 min) simulation is necessary to achieve reliable performance information.

This means large volumes of data are necessary to produce realistic outcomes. Consequently it is not feasible to provide a generic solution that can be used anywhere where water quality and harvesting are of interest. Rather, the program needs to be rewritten for each country or region where it is to be used and where the appropriate local long-term rainfall records already exist. To date this has been done for PICP only for Australia and South Africa.

Flood Control

Briefly, the design storm approach involves the use of local average design storm intensity bursts for a particular Average Recurrence Interval (ARI). A storm temporal pattern is applied to the average storm intensity to provide a rainfall distribution pattern over a period of time. Such data are stored within the software for specified Australian geographical locations. Design inputs include the area of the permeable paving, the hydraulic conductivity of the surfacing, any impervious area draining to the permeable paving, the permeable paving storage, the saturated hydraulic conductivity of the subgrade, the drainage outlet discharge characteristics and antecedent conditions (e.g. is the pavement already part-full with stormwater?).

A key function of the flood control module is the determination of the storage required to achieve the maximum peak discharge flow rate permitted from the permeable paving system. The maximum peak discharge is set by either specifying the allowable peak flow rate or an equivalent runoff coefficient. When selecting a cross-section that includes a pipe discharge with or without infiltration to subgrade, the analysis determines the *smallest* pipe size and storage volume required to achieve a maximum discharge from the pavement that is just less than that set by the user. Importantly, the discharge pipe diameter as calculated by the program should not be increased or reduced.

Water Quality

The water quality module uses the hydrological effectiveness relationships to assess the water quality improvement provided by the pavement. The program determines the minimum volume required to achieve some target reduction in pollution load. Given that the predominant mechanism for removing pollutants from the runoff flow is mechanical filtration, a simple pollutant removal algorithm is included, based on typical runoff pollutant event mean inflow concentration and reduction rates. The analysis combines the hydrological effectiveness relationships with inflow concentration removal fraction to produce an overall reduction in terms of average annual pollution load (e.g. kg/yr).

Where there is a discharge pipe the user will need to specify a constant discharge rate for pipe efflux. The discharge associated with infiltration is determined by the program using subgrade hydraulic conductivity. For installations with full infiltration discharge, 100% pollutant removal is assumed and only the surface excess flow is assumed to be untreated. For installations with both infiltration and pipe discharge only the proportion of pipe flow is considered to be treated.

Water Harvesting

The water harvesting module utilizes similar analysis techniques to those discussed above for water quality. The objective of this analysis is to determine the storage volume required to meet a nominated water demand. Three key inputs are required for the analysis. They include a constant daily demand rate (L/day), the average annual rainfall, and the storage voids ratio.

Determining the size of storage can be subjective and although supply for a given demand can be achieved it may not be necessarily the most appropriate or economical solution. With most storage systems there is a point where the return (supply) for a unit increase in storage will diminish. There are many factors that need to be considered. However, establishing storage based on diminishing rate of return approach is one option. The software analysis determines two storages, one based on a diminishing rate of return and the other based on achieving the total demand.

Design for Traffic

It is necessary to check that the thickness chosen for water management is also adequate to carry traffic. This is done by running the LOCKPAVE structural design module which forms part of the overall design process shown in Figure 2.

In conducting the structural analysis it is important that the designer recognise that the pavement sub-structure will often be fully or partially filled with water. Studies of basecourse materials for PICP by the author (Shackel et al, 2001) have shown that, at high saturations, the resilient moduli of granular materials are typically only about half the values measured at normal test saturations. This needs to be considered during design.

The structural and hydraulic analyses often give different design thicknesses. The greater of these is adopted as the final design.

CONSTRUCTION OF PERMEABLE PAVEMENTS

Construction techniques for permeable pavements differ little from the construction of conventional pavements except for the specifications that need to be applied to the permeable surfacing and to the base and sub-base materials

Surfacing Requirements

Not all types of PICP surfacing offer the same levels of in-service performance in terms of water infiltration, structural performance under traffic and ease of maintenance.

Water Infiltration

When tested new almost every type of paver for PICP will yield infiltration rates that are more than adequate to accept any rainfall event likely to be chosen for design in Australia. However, in-situ measurements on PICP which have been in service for several years (e.g. Borgwardt, 1997, 2006) show that, because of progressive clogging, the in-service values of infiltration reach equilibrium values after about 6 years which are much less than those measured on new paving. The reduction in infiltration depends on how the paver admits water through the surfacing. In this respect, pavers that are suitable for vehicular traffic can be classified into 3 groups:

1. Pavers which have openings along the joints. These openings are filled with a uniformly graded aggregate (2-5 mm) and act as vertical drains e.g. see Figure 1.
2. Pavers that have wide joints between each paver and its neighbours. These joints are filled with fine aggregate and allow water to penetrate the surface.
3. Pavers that are made of porous concrete which allows water to infiltrate through the pavers themselves.

In-situ measurements broadly indicate that pavers provided with drainage voids and openings achieve the highest long-term values of infiltration whilst those made from porous concrete give the least infiltration (Borgwardt,1997, 2006). This needs to be considered during design to ensure that the pavement can accept the design rainfall.

Structural Performance

The structural performance of any paving system depends on the paver shape, thickness and laying pattern. Structural tests of permeable pavers (Shackel et al, 1996, 2000, Urban Water Resources Centre, 2002) have confirmed these basic principles. In general pavers which have dentated shapes perform better than pavers that are rectangular. Where traffic is to be carried the use of herringbone patterns is recommended over all other patterns. For lightly trafficked pavements, such as car parks, the minimum recommended thickness of paver is 60 mm but for roads and industrial pavements a minimum thickness of 80 mm is required.

Ease of Maintenance

As noted elsewhere in this paper most of the particulate pollutants in PICP are trapped within the upper 20-30 mm of the materials filling the drainage opening and joints or, in the case of porous concrete pavers, within the concrete itself. Importantly, it has been shown that the infiltration capacity can largely be restored by removing and replacing the top 30 mm of the drainage material in the paving joints and drainage openings (James 2002, James and von Langsdorff, 2003) using conventional street vacuum sweeping equipment. In the case of porous concrete, hot water jetting and vacuum cleaning is often required (Dierkes et al., 2002; Urban Water Resources Centre, 2002). While some authorities in the USA recommend routine sweeping of PICP up to three or more times a year, experience in Europe and Australia

suggests that such frequent maintenance is often unnecessary. In this respect many pavements have performed adequately for periods of 10 to 20 years without systematic cleaning. In addition, the area of paving constructed is typically dictated by such operational requirements as the length and width of a street or parking area and this is normally much greater than the minimum area need to control runoff and infiltration. Accordingly, the effects of clogging are normally much less severe than might otherwise be expected.

Basecourse and Sub-structure Requirements

In both the USA and UK it is common to specify uniformly graded materials for the basecourse of permeable pavements. These are similar to rail ballast with a maximum particle size of 40mm for base and 80mm for sub-base. The rationale for choosing such materials is that they have high void ratios and therefore can store large volumes of water within a given pavement thickness. To date such materials have only been used in pavements carrying very light traffic such as car parks. For roads and streets the use of such coarse uniform materials are unlikely to provide adequate service under heavy traffic. Whilst there has been limited use of normal well-graded granular road base in PICPs in Canada, the USA and Australia such pavements have only been in service for very short periods of time and their long term performance is unknown. For this reason the author initiated laboratory studies of well-graded PICP base materials in the 1990s. These studies are ongoing but have indicated that a good compromise between permeability and resilient modulus can be achieved with relatively minor changes to traditional gradings for dense graded road base (Shackel et al, 2001). The work has also shown that it is possible to manufacture cement treated base that may be suitable for PICPs (Oeser et al 2009).

Some American reports (e.g. Smith, 2001) have recommended that, during construction of a PICP, the subgrade be left uncompacted so as to facilitate infiltration. Clearly this is not conducive to good performance under traffic and normal compaction standards for the base, sub-base and subgrade should be rigorously applied.

IN-SERVICE PERFORMANCE OF PERMEABLE PAVEMENTS

Permeable pavements slowly clog over time because PICPs retain up to 90% of solids suspended in the water infiltrating the pavements (Urban Water Resources Centre, 2002). Field monitoring of PICPs (James, 2002; Borgwardt, 1997; 2006) has confirmed that the infiltration capacity of permeable pavements decreases as the amount of oil, grease and fine organic and inorganic matter accumulates within the aggregate filling the joints or drainage openings in the surface. This needs to be considered in the design of PICP when choosing a design rate of infiltration of water through the surface.

To study the effects of clogging and to assess the likely need for maintenance in PICPs a series of infiltration tests were conducted in NSW and South Australia on pavements that had been in service for periods between 8 and 11 years. These pavements had performed well over time without being subject to any systematic maintenance. The objectives of the tests were to assess a wide range of pavements using in-situ tests to measure their current infiltration rates, to examine clogging of the jointing materials, to evaluate the effects of sweeping the pavement surface and to assess the design implications of the in-service performance of the pavements.

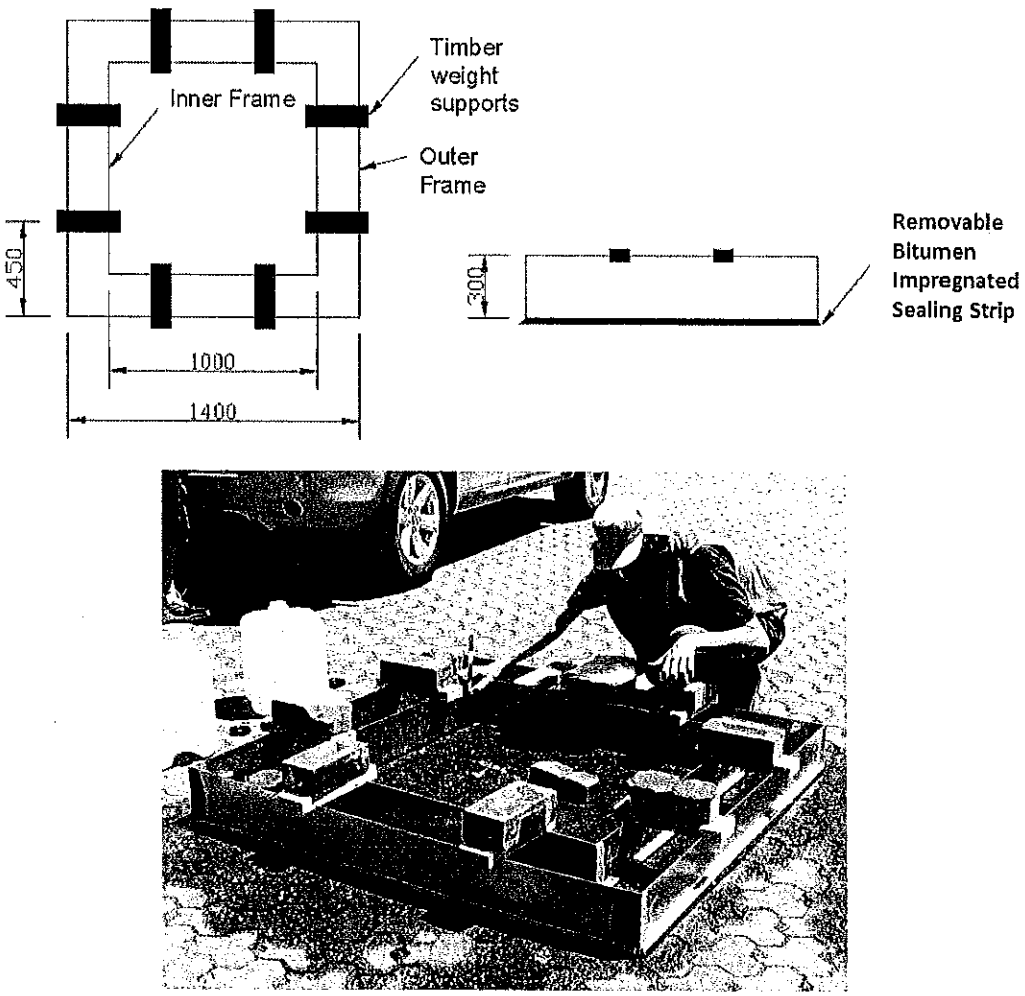

Figure 4. Double Ring Infiltrometer (all dimensions in mm).

Infiltration measurements were made using a double-ring infiltrometer (Figure 4). The test procedure was based on Australian Standard AS4693.5–2004. Details have been given elsewhere (Shackel et al, 2010). In general, the paving was tested "as found" without any attempt to clean the surface prior to infiltration measurements. In all cases, before measurements commenced, the surface was flooded with water. Repeated measurements were made at each test location to ensure that the tests were conducted under saturated conditions. The infiltration test results are summarised in Table 1. In one pavement laid without jointing materials the infiltration rate was too high to be measured accurately. Other tests were subsequently found to have been conducted over buried services. The data summarised in Table 1 exclude these results.

Six permeable pavements selected from more than 100 candidate PICPs were tested in New South Wales. A further three pavements were selected for testing in South Australia. All of the pavements had granular basecourses except for the Sydney Sports Ground paving which had a recycled concrete basecourse overlain with a thin aggregate capping. The pavements included pedestrian areas, car parks, roads and residential streets. All of the pavements used pavers with openings located along the paving joints (e.g. as shown in Figure 1) except two in South Australia which had widened joints to infiltrate stormwater runoff. Unfortunately, these joints had been left unfilled to facilitate a high infiltration capacity and, consequently, there was little or no structural interlock between the pavers. This is not accepted or good practice for PICP. Accordingly, the results from the pavements with unfilled joints, although published elsewhere (Shackel et al, 2010), are not included in the test summary given as Table 1 or discussed further here. With one exception (Shackel and Mearing, 2003) none of the pavements in Table 1 had been tested before. The pavements all carried vehicular traffic ranging from cars and service

vehicles to normal road traffic and had been in continuous service up to the time of testing in early 2009

Table 1: In-situ Measurements of Infiltration

PAVEMENT TYPES AND LOCALES	DATE	PAVER TYPE	INFILTRATION TEST LOCATION	INFILTRATION RATES	
				mm/h.m^2	l/s.ha
PUBLIC SPACE + VEHICLES Olympic Park, Homebush, Sydney	March 1998	80 mm Eco-Trihex	Recently swept area under trees along Olympic Boulevard	282 - 343	784 - 952
			Approach to station – bottom of slope between trees	176 - 229 183 - 246	490 - 635 508 - 683
RESIDENTIAL STREET Smith St, Manly	December 2001	80 mm Ecoloc	Eastern side in car parking lane	632 - 818	1754 - 2272
			In road adjacent to driveway	168	438 - 519
ROAD Terralong Street, Kiama	October 1997	80 mm Ecoloc	Roadway - SE end Roadway - NW end	113 - 145 71- 109	313 - 405 196-303
CAR PARK Victoria Park, Chippendale	December 1999	80 mm Eco-Trihex	High point	1080	3000
			Low point	147 - 206	408 - 571
PARKING BAYS Karrabee Avenue, Gladesville	June 2000	60 mm Eco-Trihex	Car parking along asphalt road – High point	192 - 267	533 - 741
			Car parking along asphalt road – Low point	335 - 436	930 - 1212
PEDESTRIANS + VEHICLES Sydney Sports Ground, Moore Park	November 1998	60 mm Eco-Trihex	High point	197 - 253	546 - 702
			Midpoint adjacent to trees	216 - 216	601 - 833
			Low point	112 - 150	312 - 417
LANEWAY Woodville, SA	August 1999	80 mm Ecoloc	Centre of pavement	180	500

As shown in Table 1 it was observed that often, but not invariably, the infiltration rates measured at the lowest elevations in the pavement were less than those measured at higher elevations, presumably because of sediment migration to the low points. Overall, the data given in Table 1 provide a useful check on the infiltration values needed for hydraulic design. To allow for the effects of clogging in service it is not advisable to use manufacturers' values of infiltration for pavers determined by laboratory tests because these do not reflect the effects of clogging. In some countries it is deemed sufficient for design to assume that permeable paving will achieve infiltration rates in service that are no more than 10% of the initial values measured in-situ or in the laboratory. However, a better approach is to quantify changes in the infiltration capacity of PICP over time. Experience in Europe and in-situ tests show reductions in PICP permeability due to clogging reach a near equilibrium condition between 5 and 10 years after construction (Dierkes et al., 2002; Borgwardt, 2006; Kadurupokune and Jayasuriya, 2009). The PERMPAVE program incorporates values of surface infiltration gained from in-situ tests of more than 60

permeable pavements in Germany (Borgwardt, 2006). Published equilibrium values of infiltration at 6+ years range from about 200 l/sec.ha to 900 l/sec.ha depending on the type of paver. From Table 1 it may be seen that the infiltration rates measured in Australia ranged from 312 to 3 000 l/s.ha (112 to 3000 mm/h.m^2). The average infiltration rate was about 800 l/sec.ha. i.e. slightly less than the maximum equilibrium value reported in Germany. Overall, the results demonstrated that, even for pavements that had received little routine maintenance, the infiltration rates 8 to 10 years after construction remained at serviceable levels.

Drainage Voids and Jointing Materials

As noted above, work in Europe and Canada indicates that the infiltration capacity of PICPs can largely be restored by removing and replacing the top 10 to 25 mm of the drainage material in the paving joints and openings (James 2002, James and von Langsdorff, 2003). To examine this further a study was made of the materials filling the drainage voids. For each of the pavements tested, the upper and lower 30mm of drainage material was sampled (i.e. to a total depth of 60 mm below the upper surface of the pavers). These samples were retrieved at 14 locations. The samples were dry sieved in accordance with Australian Standard AS 1289.3.6.1 to determine their particle size distributions. It was found that the drainage materials generally had a maximum particle size of 6 to 7 mm with 10% or more passing the 1.18 mm sieve and up to about 5% passing the 0.3 mm sieve size (e.g. Figure 5). This meant that the gradations typically lay towards the fine limits of the ASTM #9 grading commonly recommended in Australia both for bedding and for filling the drainage voids and joints of PICP: a specification based on laboratory testing (Shackel et al, 1996; Shackel, 1997).

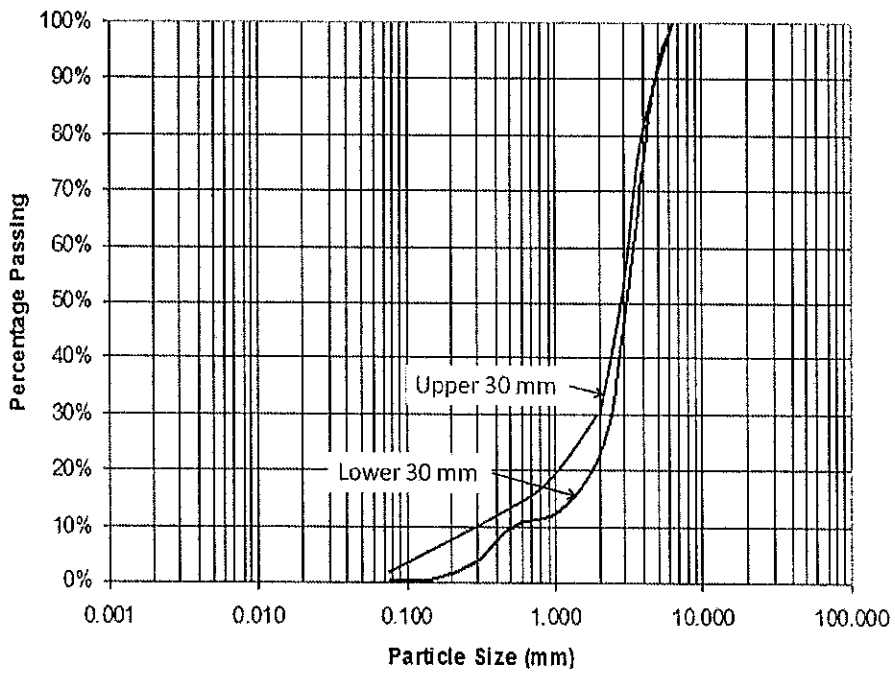

Figure 5. Typical Drainage Voids Material Grading

At 10 of the 14 locations sampled it was found that there were more fine particles in the upper 30 mm than in the lower 30 to 60 mm of jointing material. Typical results are shown in Figure 5. These indicated that the increase in fines generally occurred in the particle size range of 0.2 to 2.0 mm. The observation that most particulate material is trapped in the upper portions of the drainage openings is consistent with earlier reports from overseas (James and von Langsdorff, 2003; Borgwardt, 2006).

The drainage material sampled from areas known to have been routinely swept such as Olympic Park showed no change in fines between the upper (0 to 30 mm) and lower jointing depths (30 to 60 mm). This suggests that most of the fine clogging materials observed in the upper depths of the joint material for unswept pavements would have been located immediately at the top of the joints, i.e. from whence it could easily be removed by sweeping. To test this hypothesis further, infiltration tests were repeated on three sites after manually sweeping the

surface with a stiff broom. At two of these locations the measured infiltrations were significantly greater than for the as-found surfaces (Shackel et al, 2010). Overall, the results suggest sweeping is beneficial to performance. However, as shown in Table 1, many pavements maintained satisfactory infiltration performance without maintenance. Further study of maintenance measures is therefore warranted.

SUMMARY AND CONCLUSIONS

1. Permeable pavements can make a significant contribution to sustainability consistent with the concepts of Water Sensitive Urban Design (WSUD). Overseas studies and experience have shown that this can be achieved without increase in project costs.
2. PICP systems have been studied for more than 20 years, including Australian research since the early 1990s.
3. Australian PICP research has embraced measurements of infiltration rates, structural capability, pollution trapping and clogging.
4. Australian and overseas studies have provided sufficient data to allow the design of PICP for all types of pavement to proceed with confidence.
5. This paper has detailed the development of a comprehensive methodology for the design of PICPs in the Australian context that is consistent with WSUD principles and local practice for managing rainfall runoff and water quality.
6. The methodology embraces stormwater management (flood control), water quality and water harvesting; factors rated as important by municipal engineers engaged in water sensitive urban design. The pavement must also be designed to withstand the effects of traffic. To achieve this, the new hydraulic design package, PERMPAVE has been integrated with existing structural design software, LOCKPAVE.
7. This development of the design methodology software has been complemented by field investigations of the hydraulic conductivity of permeable pavements in both New South Wales and South Australia.
8. In design, care must be exercised in the selection of the type of paver as this affects both the hydraulic and structural performance of the pavement.
9. Basecourse materials for PICP have to date received only limited study. Such studies indicate the need to use substantially reduced moduli for granular materials in structural analyses of PICP. However, ongoing studies have shown that cement treated materials may also have a role in PICP construction.
10. Because of the need to serve at high saturations, the design moduli of PICP base materials is only about 50% of the values determined by routine repeated triaxial load tests.
11. The field studies have confirmed that clogging of PICP is a natural ongoing process that must be considered in design.
12. It has been found that the majority of the sediment causing clogging is retained in the upper horizons of the material filling the drainage voids and that this sediment can be removed with sweeping. Although the testing indicated that frequent pavement sweeping may not be routinely required, further study of maintenance is needed.
13. Despite clogging over periods of 8 to 10 years, the test results showed that the pavements studied still exhibited good infiltration rates. As noted above, previous studies have shown that little change in pavement conductivity occurs after periods in service of 6 to 10 years. Accordingly, it may be concluded that, subject to the correct choice of design parameters, PICP can be expected to serve satisfactorily for periods comparable to other forms of pavement.
14. An important finding was that "as new" infiltration rates should not be used for the design of permeable pavements. Instead, a clogging factor needs to be applied in the design of PICP to allow for the incremental clogging that occurs. Further research needs to focus on quantifying these clogging factors for design purposes.

REFERENCES

Argue J.R. Ed. (2004). WSUD: Basic Procedures for Source Control of Stormwater – A Handbook for Australian Practice. UNISA/Australian Water Assn.

Argue, J. & Pezzaniti, D.(2005), Chapter 11 - Infiltration Systems, IN WONG, T. H. F. (Ed.) *Australian Runoff Quality,* Institution of Engineers, Australia, Sydney.

Borgwardt, S, (1997). Performance and Field Tests of Application for Permeable Paving Systems. Betonwerk und Fertigteil-technik.

Borgwardt, S, (2006). Long-Term In-Situ Infiltration Performance of Permeable Concrete Block Pavement. Proc 8th Int. Conf. on Concrete Block Paving, San Francisco.

Dierkes, C., Benze, W. AND Wells, J, 2002. Sustainable Urban Drainage and Pollutant Source Control by Infiltration. Proc. Stormwater Industry Assn Regional Conf. Orange.

Engineers Australia (1999). Australian rainfall and runoff – a guide to flood estimation. 3rd edition (1987) of "Australian Rainfall and Runoff – Volume 1". ISBN 185 825 6878.

Interpave/Scott Wilson, (2006). The Costs of Paving – Comparative Initial and Whole of Life Costs for Pavements. Interpave, London.

James, W. (2002). Green Roads: Research into Permeable Pavers, Stormwater Vol. 3, No. 2.

James W. and von Langsdorff H. (2003). The Use of Permeable Concrete Block Pavement in Controlling Environmental Stressors in Urban Areas. Proc. 7th Int. Conf. on CBP, South Africa.

Kadurupokune N. and Jayasuriya N, (2009). Pollutant load removal efficiency of pervious pavements: is clogging an issue? Water Science & Technology, WST 60.7 IWA Publishing

Oeser, M., Shackel, B., Kabitzke, U. and Da Luz, G. (2009). A Pilot Study of Cement-Treated Basecourses for Use in Permeable Interlocking Concrete Pavements. Proc. 9th Int. Conf on Concrete Block Paving, Buenos Aires,

Pratt C J. (2001). A Review of Published Material on the Performance of Various SUDS Devices. Rpt. prepared for The Environmental Agency UK.

Shackel B. (1996a). *Handbuch Betonsteinpflaster.* Beton-Verlag, Dusseldorf (1996) 216pp

Shackel B (1996b). Permeable Eco-paving - An Environmental Option for Stormwater. Management. Proc 4th Annual Conf. Soil and Water - Management for Urban Development. Sydney, pp 97-105.

Shackel B. (1997). Water Penetration and Structural Evaluations of Permeable Eco-paving. Betonwerk und Fertigteil-technik Vol 63, No3, March, pp110-119 ISBN 0373-4331

Shackel B. (2000). Computer-Based Mechanistic Methods For Concrete Block Pavement Design. Proc. 6th Int. Conference on Conc. Block Paving. Tokyo.

Shackel B. (2005). Worldwide Progress in Permeable Paving. Pave-It, No.5, Interpave, UK

Shackel B. (2006). Design of Permeable Pavements Subject to Traffic. Proc. 8th Int. Conf. On Concrete Block Paving. San Francisco.

Shackel B. and Pezzaniti D. (2009) Development Of Design Software for Permeable Interlocking Concrete Pavements. Proc 9th Int. Conf. on Conc. Block Paving, Buenos Aires.

Shackel B. and Pezzaniti D. (2010) Development of Design Procedures and Software for Permeable Interlocking Concrete Pavements. Proc. 5th Australian Road Engineering and Maintenance Conf. Melbourne

Shackel, B., Kaligis, S., Muktiarto and Pamudji. (1996). Structural and Infiltration Tests of Permeable Eco-Pavers. Proc. 5th Int. Conf. on Concrete Block Paving, Tel Aviv.

Shackel B, Ball J. and Mearing M. (2003). Using permeable eco-paving to achieve improved water quality for urban pavements. Proc 8th Int Conf on Concrete Block Paving, South Africa.

Shackel B, Jitakeerul P. and Prasetyo S.B. (2001). An Experimental Study of Unbound Base Material for Use in Permeable Pavements. Proc. 16th Conf. Australian Road Research, Melbourne.

Shackel B, Litzka J. and Zieger M. (2000). Loading Tests of Conventional And Ecological Concrete Block Paving. Proc. 6th Int. Conference on Conc. Block Paving. Tokyo.

Shackel B, Myers B. and Pearson A. (2010). Experience in The Application of Permeable Interlocking Concrete Paving In Australia. Concrete in Australia. Vol. 35 No.2 pp 45-50.

Smith D. R. (2001). Permeable Interlocking Concrete Pavements. ICPI. 2nd Edition

Urban Water Resources Centre, (2002). Research into "Effective Life" of Permeable Pavement Source Control Installations. University of South Australia. Final Rpt Project 07 67680, prepared for Catchment Management Subsidy Scheme.

USEPA (U.S. Environmental Protection Agency),(2007). Storm Water Management Model User's Manual Version 5.0. EPA/600/R-05/040

Zhuge Y. and Hazell D. (2007). Development of Environmentally Friendly Permeable Concrete Pavement Base Course Using Recycled Materials. Proc. Concrete 2007, Adelaide

ACKNOWLEDGEMENTS

Much of the work described in this paper was funded by the Concrete Masonry Association of Australia and was done in collaboration with the School of Natural and Built Environments and the Centre for Water Management and Reuse, University of South Australia. The assistance of Richard Martin, Adbri Masonry Australia, in locating and documenting the pavements tested in NSW is also gratefully acknowledged.

AUTHOR BIOGRAPHY

Dr Brian Shackel has more than 47 years of professional experience. He has conducted research into concrete block paving since the 1970's and is the author of numerous publications on this topic. His pioneering book "The Design and Construction of Interlocking Concrete Block Pavements" has been revised and republished in German, Japanese and Hungarian editions. He has lectured on paving in more than 25 countries and has acted as a consultant to major paving projects worldwide including roads, airports and container yards.

citygreen

PO Box 3133 Singleton DC, NSW, 2330
31 Enterprise Crescent, Singleton, NSW, 2330
Phone: (02) 6578 8250 Fax: (02) 6578 8223
Email: info@citygreen.com
ABN: 81147746192

October 8, 2013

David Tooby
King & Campbell Pty Ltd
Po Box 243
Port Macquarie NSW 2444

Re: Structural Soil Cell modules beneath trafficable areas

Structural 'Soil Cell' modules are highly engineered skeletal units that snap together to form a matrix with high void space (in excess of 90%).

This void space is utilized for provision of rainwater detention or retention, or for filling with media for tree root growth and/or water filtration. The Modules connect vertically and laterally, for dispersion of applied load. The units are subjected to rigorous QA systems to ensure the ultimate load capacity of production modules conforms to the published laboratory crush tests.

Due to increasing urbanization, along with the requirements for environmentally responsible design, many asset owners are looking to utilize the space beneath trafficable pavements. Properly constructed soil cell tree pits provide adequate support for trafficable pavements.
Geotechnical engineers have analysis tools that estimate the applied design load at the base of the chosen pavement; which is then compared against the tested ultimate load strength of the soil cell matrix. A minimum safety margin of approximately 20% is typically applied to the ultimate load rating of the matrix.

The project design at Inverell Town Centre proposes the use of structural soil cell matrix (Strata Cell brand) beneath a centre at-grade median of 3.1m width, supporting large deciduous tree planting.
This design is similar to the Brisbane Street Dubbo project, where soil cells do extend under traffic lanes. Geotechnical engineers for this project applied AS5100 and the W80 wheel load in calculating the pavement thicknesses and sub grade design.
Another similar project is the Old Choa Chu Kang road project in Singapore, where Australian geotechnical engineers applied AS5100 standards to the pavement analysis. This project was funded by the Singapore Government and the pavement is being monitored by the Singapore National University.
Sydney Olympic Park has moved to the incorporation of Strata Cell Structural Soil Cells in the new Town Centre master plan. The gap-graded structural soil utilized in the original construction did not provide a successful outcome for the trees.

To summarize, a suitably designed Strata Cell soil cell matrix can provide an engineered base for trafficable road pavements, while supporting healthy trees and water harvesting.

Please contact me if you have further queries regarding this matter.

Sincere Regards,

per

Ben Gooden

Golder Associates

TECHNICAL MEMORANDUM

DATE 9 October 2013 **REFERENCE No.** 137622044-002-Rev0

TO Joe Gooden

CC Ben Gooden

FROM Karen Allan / Craig Curnow **EMAIL** ccurnow@golder.com.au

INVERELL PERMEABLE PAVEMENT – CONCEPT DESIGN

Dear Joe/Ben,

In response to your email dated 3rd October 2013, Golder Associates Pty Ltd (Golder) has carried out analyses to assist in concept design of the proposed permeable pavement system for Main Street at Inverell.

The permeable pavement system is proposed for the centre median of Main Street between Campbell and Vivian Streets.

The following proposed pavement profile was provided to us:

- Permeable pavement system comprising 80 mm interlocking block pavers by Adbri Masonry (Trihex).
- 40 mm bedding layer of crusher dust
- No Fines Concrete (NFC, thickness to be determined)
- StrataCell® (30 or 60 series to be determined)
- 200mm thickness of "15 mm bluestone"
- Subgrade

The following traffic loaded was provided to us:

- 10 tonnes vehicles occasionally straying onto median strip
- 31 kN wheel load
- Ultimate load factor of 1.8
- Dynamic load factor of 1.5

Based on the above information, we have carried out concept design level anlayses to assess the likely thickness of NFC, type of reinforcement and which series StrataCell® may be used.

Thickness of the NFC concrete layer has been assessed as the thickness required to reduce vertical stress on underlying StrataCell® units. To do this, the Yoder and Witczak (1975) two layered elastic pavement stress distribution system was used. This chart estimates vertical stress with depth which depends on magnitude of applied pressure, radius of applied load and relative stiffness of the two layers (in this case concrete and a composite of the StrataCell® and underlying soil). Tyre pressure is equal to the applied pressure and for all highway pavement design is taken to be 750 kPa. As wheel loads increase, tyre contact area increases and contact pressure remains unchanged. From the Yoder chart, it can be estimated from the given wheel load and including the ultimate and dynamic load factors, that a total concrete pavement

thickness of 125 mm may yield a vertical stress of 300 kPa on the underlying StrataCell® units. Given that the pavers are 80 mm thick, the NFC would need to be at least 45 mm thick. It is likely that a 45 mm thick layer of NFC will be difficult to build and it will be difficult to locate reinforcement within the bottom third of the layer whilst maintaining some concrete cover to the reinforcing. A practical minimum thickness of 75 mm is recommended, which would also provide some margin of safety on the cell stress.

We recommend that reinforcing comprise galvanised SL51 mesh, in lieu of galvanised chain-mail mesh, for improved reliability. The mesh should be placed about 25 mm from the bottom of the layer (this may be achieve by using small bar-chairs or placing the mesh over an initial screed of NFC). For the above calculations, the 30 series should be suitable, given that ULS and dynamic loads have been taken into account to increase applied loads.

It should be noted that no information is available regarding subgrade conditions at the site. However we anticipate that layers of aggregate and/or geogrids may be required below the StrataCell's® to provide additional support where the subgrade CBR is less than 5%.

Detailed design of the pavement system will be required.

GOLDER ASSOCIATES PTY LTD

Karen Allan
Senior Geotechnical Engineer

Craig Curnow
Principal Geotechnical Engineer

KA/CSC

j:\geo\2013\137622044_citygreen_pavements_evaluation\correspondence out\137622044-002-rev0.docx

citygreen™
URBAN LANDSCAPE SOLUTIONS

NEW

StrataCell® Generation 6

engineered solutions for greener cities

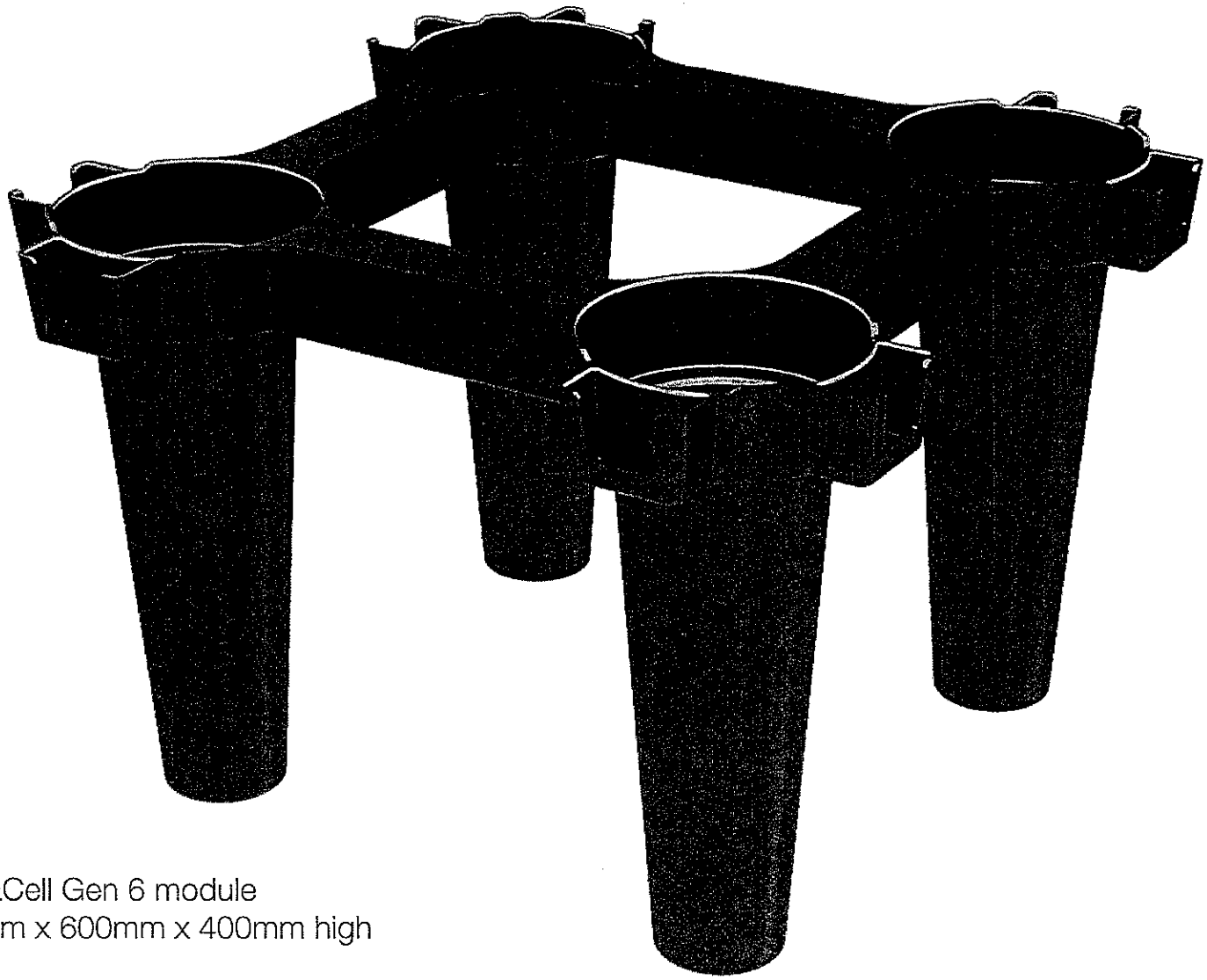

StrataCell Gen 6 module
600mm x 600mm x 400mm high

www.citygreen.com

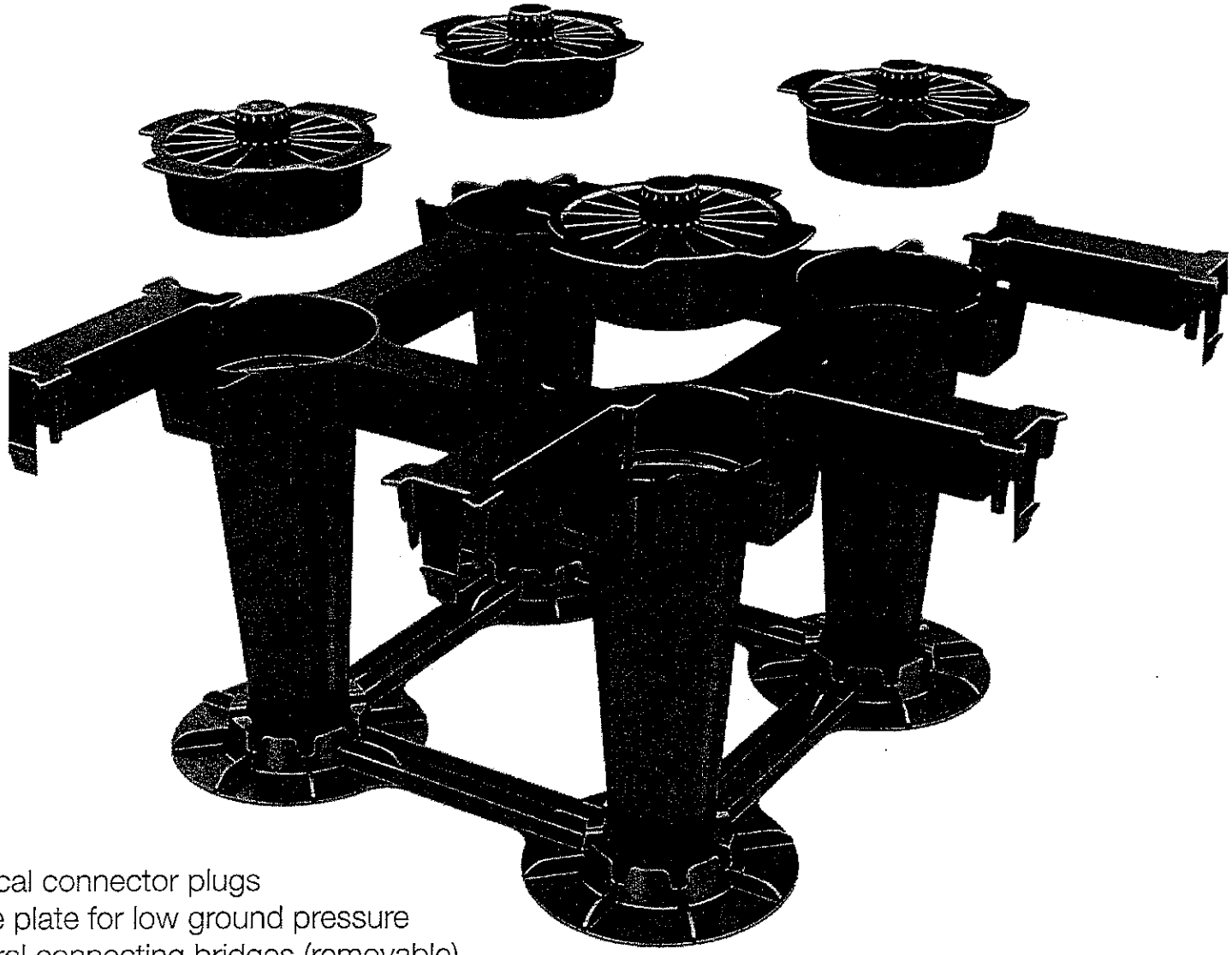

Vertical connector plugs
Base plate for low ground pressure
Lateral connecting bridges (removable)

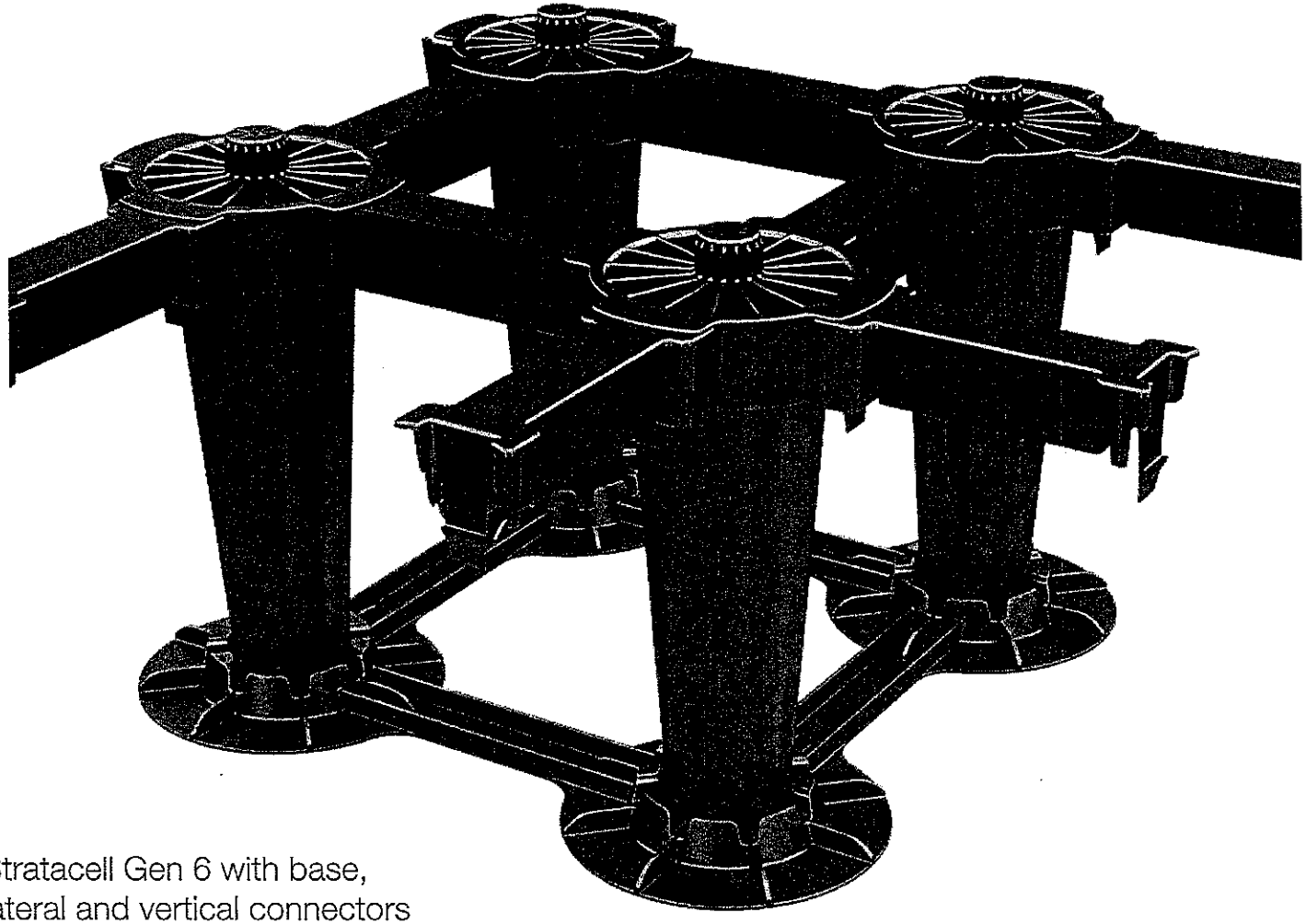

Stratacell Gen 6 with base,
lateral and vertical connectors

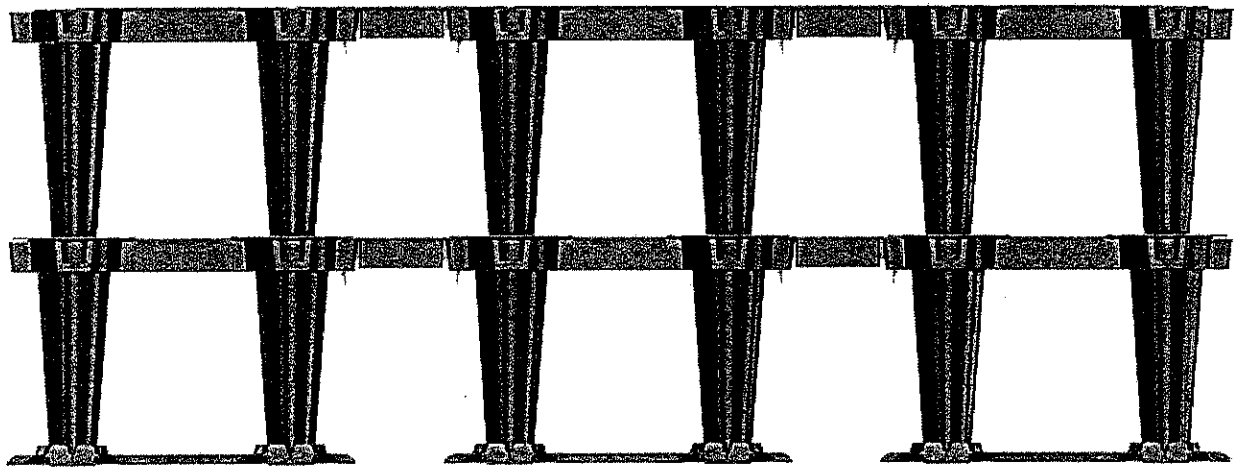

Stratacell Gen 6 matrix, horizontal view through matrix

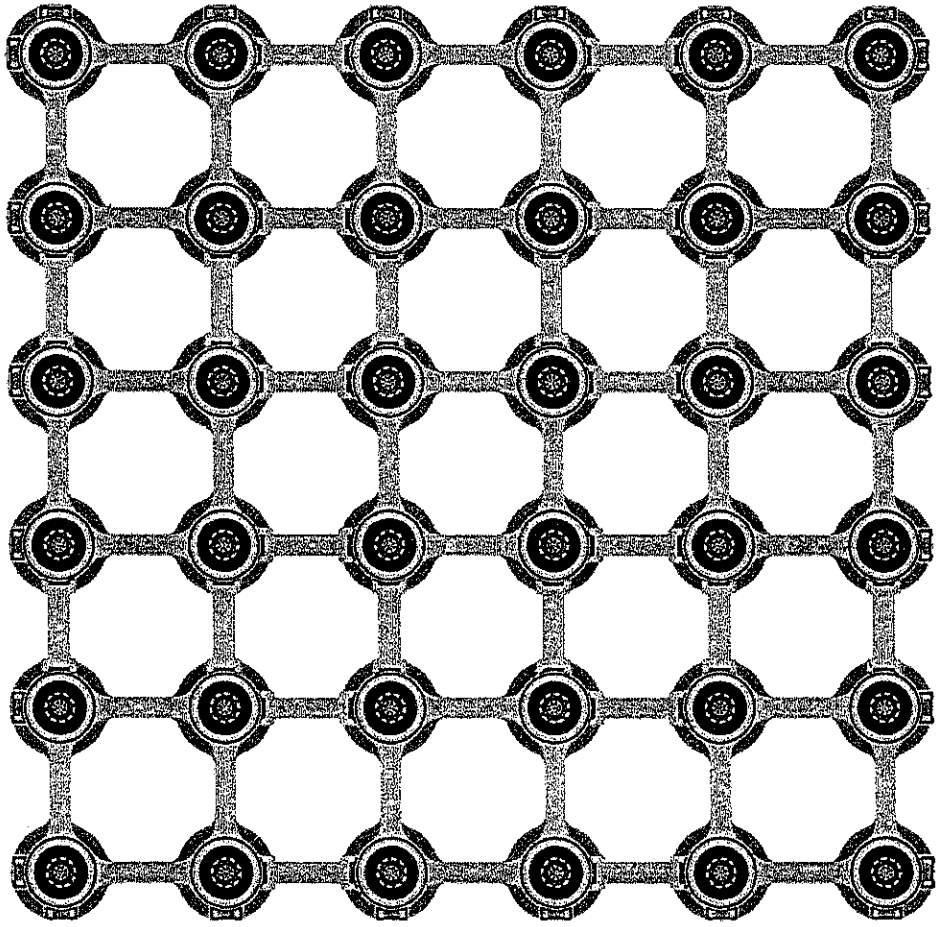

Stratacell 6 top view of matrix - designed for optimised soil filling

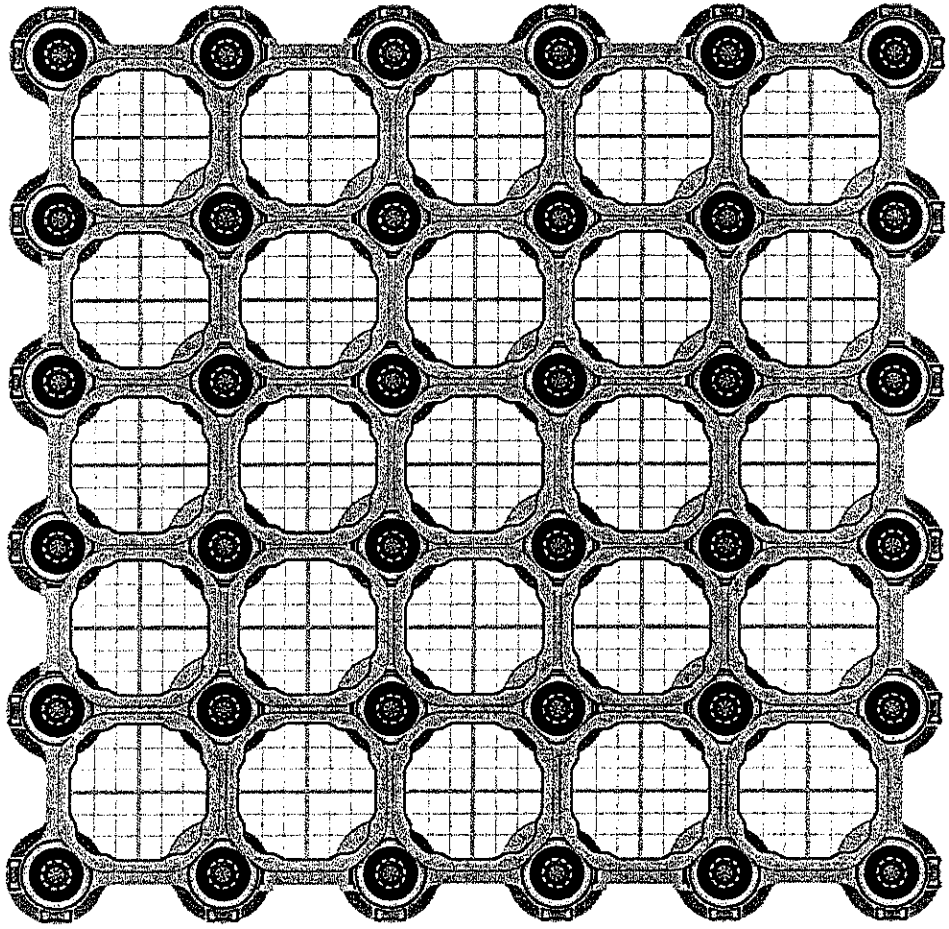

Stratacell Gen 6 - matrix with top grates installed

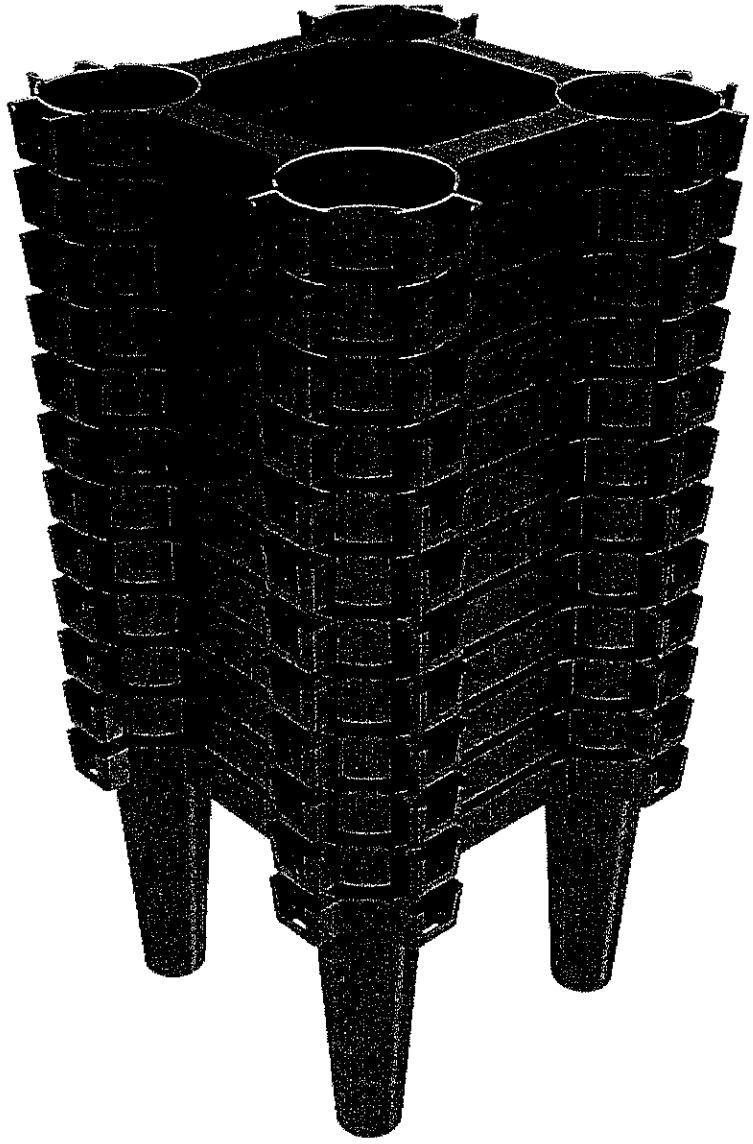

Stratacell Gen 6 nesting for transport - improved freight savings

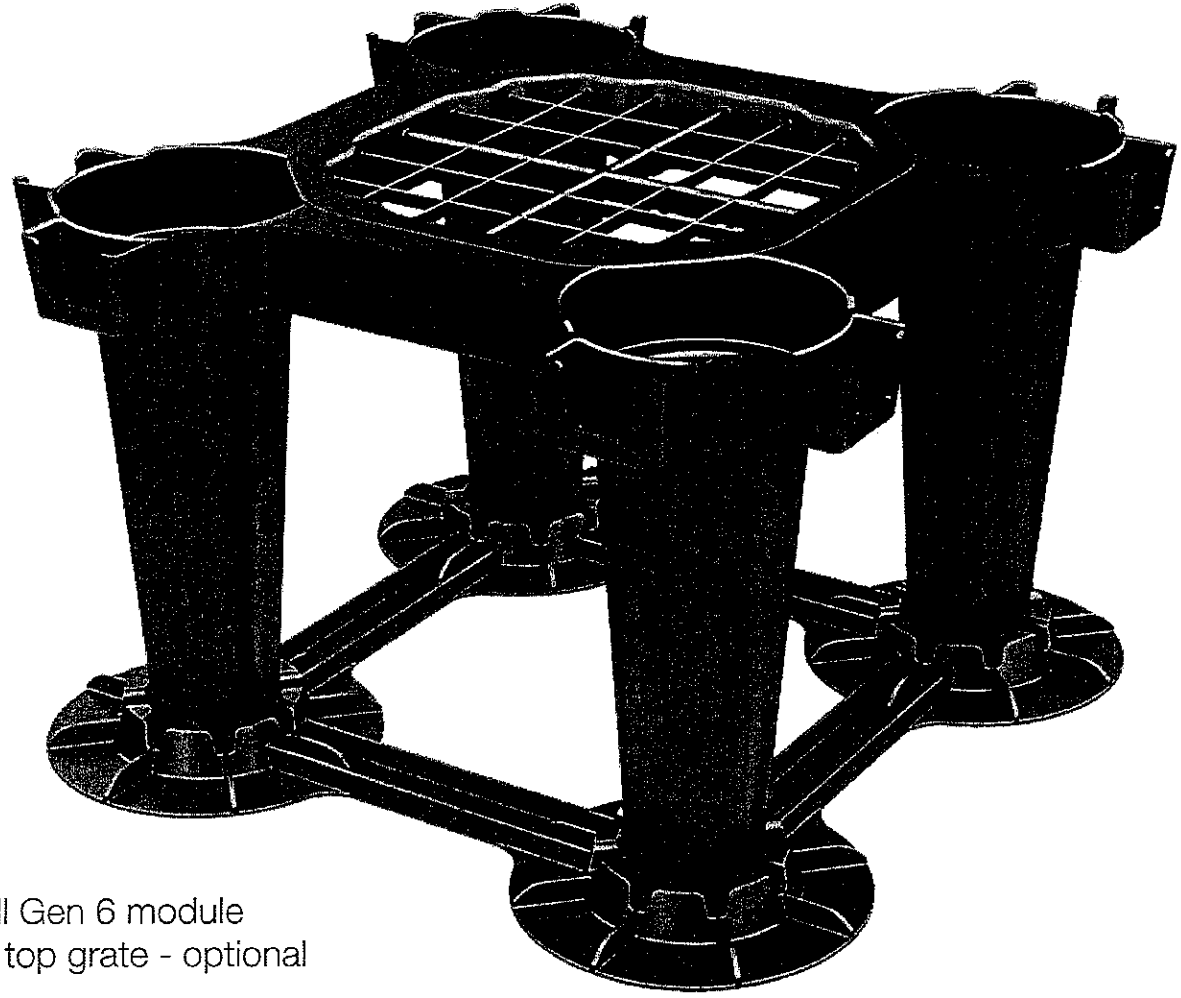

Stratacell Gen 6 module
showing top grate - optional

SECTION 1: PRODUCTS

1.1 General description

The Contractor shall consult both the complete documentation and drawings for soil types, uses and locations. The soil types required shall consist of imported soil that fully complies with the appropriate standard.

Growing Medium is defined as an amended existing topsoil that contains organic matter; is capable of sustaining vigorous plant growth; contains a typical clay content of > 25% by mass; complies generally with the typical uses of AS 4419 (2003); is free from unwanted matter such as:

- Stones, rock and pebbles greater than 10mm measured by longest dimension
- Hard clods or objects greater than 25mm dimension
- Roots with a section diameter exceeding 10mm or a length exceeding 100mm
- Sticks and rubbish
- Material toxic to plants
- Materials that may pose a danger to human health (e.g. glass, hard plastic)

The proposed Growing Medium shall be analysed for its chemical and physical properties to ascertain quality. The Contractor is responsible for the collection and analysis of a sufficient number of samples to accurately characterise the resource and if required, determine the amendments required to meet the performance specification indicated in Table 1-1.

Table 1-1: Acceptable chemical and physical properties for the Growing Medium used to backfill the StrataCell™ matrix after installation. It is unacceptable for fertiliser(s) and other amendments (as recommended by SESL based on laboratory testing) to be applied after soil placement to bring the chemistry of the material into specification. Follow-up testing is required to ensure that this performance specification has been achieved.

Item		Units	Growing Medium backfill for StrataCell™ modules.
pH	**in H_2O (1:5)** [1]	pH units	6.0 to 7.2
	in $CaCl_2$ (1:5) [1]	pH units	5.8 to 6.8
Electrical Conductivity (1:5) [2]		dS/m	< 2.5
Cation Analysis	**Sodium** [3]	% eCEC	< 5
	Potassium [3]	% eCEC	5 to 15
		mg/kg	> 262
	Calcium [3]	% eCEC	60 to 75
		mg/kg	> 1600
	Magnesium [3]	% eCEC	15 to 25
		mg/kg	> 365
	Ca:Mg	Ratio	3 to 10
	Ca:K		10 to 30
	Mg:K		2 to 10
	Aluminium [4]	% eCEC	< 2
	Cation Exchange Capacity	meq/100g	> 25
Phosphate [3]	**P sensitive planting**	mg/kg	5 to 15
	General plantings		80 to 150
Ammonium + Nitrate [5]		mg/kg	50 to 100
Sulphate [3]		mg/kg	40 to 100
Micronutrient Analysis [3]	**Iron**	mg/kg	76 to 278
	Manganese	mg/kg	> 20
	Zinc	mg/kg	6 to 15
	Copper	mg/kg	7 to 30
	Boron	mg/kg	1.4 to 2.7
Organic Matter [6]		% by mass	3.0 to 8.0
Toxicity Index [7]		mm	> 70
Wettability [8]		mm/minute	> 5
Dispersibility [9]	**in H_2O**	-	1 or 2
	in $CaCl_2$	-	1 or 2

Methods:
[1] AS4419 (2003) Appendix D [2] AS4419 (2003) Appendix D [3] Extractable nutrients by Mehlich 3 (1984) [4] Method 83.1 to 83.5 Black (1983) [5] AS4419 (2003) Appendix D and Bradley et al (1983) [6] Organic matter based on calculation from Total carbon by Dumas Combustion Furnace [7] AS4419 (2003) Appendix F [8] AS4419 (2003) Appendix C [9] AS4419 (2003) Appendix G

SECTION 2: QUALITY CONTROL (QC)

2.1 Generally

A minimum of two (2) weeks before Works commence, obtain and submit written statements from suppliers of Growing Medium, giving, where applicable:

- Particulars of the supplier and their experience in supplying this type of work
- Production capacity for material of the required type, quantity and quality
- Source of supply
- Lead times for delivery of materials to the site
- A warranty certifying that all material supplied complies with contract requirements and is suitable for the intended use, and that turf and plant species are true to the required species and type, and free from diseases, pests, weeds and the like
- Details of conditions associated with warranties
- Recommendations for use and maintenance

Prior to any Growing Medium amendment, laboratory testing is to be conducted to confirm the soil condition. Testing is to be carried out on stockpiled Growing Medium that has been dedicated for use on the project. Testing frequency shall follow the rates contained in Table 2-1.

All testing as required by the specification shall be arranged and carried out by the Contractor and all test results records made available to the Superintendent. The cost of all such testing shall be borne by the Contractor.

The minimum frequency of testing shall be in accordance with either Table 2-1 of the specification or an approved Quality Management System as deemed appropriate by the Superintendent.

The nominated soil testing laboratory for this project is:

Sydney Environmental & Soil Laboratory Pty. Limited (SESL)
Postal: PO Box 357 PENNANT HILLS NSW 1715
Laboratory: 16 Chilvers Road THORNLEIGH NSW 2120
Phone: 02 9980 6554
Fax: 02 9484 2427

Contact: Murray Fraser
Mob: 0433 111 100
Email: murray@sesl.com.au

The Contractor is to adjust the proposed soil mixes in accordance with the agronomists report supplied by SESL.

Design, manufacturing and placement of a high quality Growing Medium requires a well designed and administered calibration and QC program. This program shall set the parameters to be included in the QC testing, the procedures for sampling, sampling intervals, handling the samples (chain of custody), the limits/tolerances or confidence intervals for accept/reject status within a sample, and the allowable variability of test parameters between samples.

The quality control system must have a simple paper trail that provides for traceability at any point down the track. Each batch of soil should be identified by date of manufacture,

quantity, and a corresponding test result and should link into when the material was delivered and where the material was placed.

The Contractor should refer to the testing frequencies indicated in Table 2-1. Variations to the frequencies in this table are permitted on the submission to the Superintendent of an alternative testing program that clearly achieves the desired outcome of quality control. Materials supplied from operations that have a third party endorsed Quality Assurance Program may be acceptable pending submission of the relevant documentation.

Suppliers shall provide a Declaration of Compliance including information detailing each of the relevant parameters being declared, together with analytical information from an approved laboratory.

2.2 Testing Frequency

Growing Medium shall only be supplied for installation from certified stockpiles that have been tested (as a minimum) at the rate specified in Table 2-1 and shown to conform to the requirements indicated in relevant sections and table of this report.

Once the Growing Medium has been produced and all QC approvals have been met, the stockpiled material shall be protected against the effects of weather. If heavy rain is expected, stockpiles shall be covered, where practical. To protect against wind erosion of soil or organic components, the stockpiles shall be kept moist on the surface of the stockpile.

Once the Growing Medium is transported to the installation site, care shall be taken to ensure that the loading equipment and haul vehicles are properly sanitized such to contain no foreign soil, aggregate, asphalt, etc., that might contaminate the Growing Medium. When the stockpile material is being picked up for loading, care shall be exercised to assure that the bucket of the loading equipment is not picking up underlying material and that tyres or tracks are not 'tilling' other material into the mix.

Once a stockpile has been tested and certified, no further material is to be added to the stockpile.

Table 2-1: Required testing frequency to achieve compliance testing. Samples shall be tested to the performance criteria indicated in the relevant section of this report.

Material Type	Application	Key Quality Verification Requirements	Minimum Test Frequency
Growing medium	Growing Medium for backfilling of StrataCell modules after installation	All requirements identified in tables 2-2 and 2-3 and clauses 1.4.7 and 2.2.2	3 at approval then 1 per 100 m^3 or part thereof.

2.3 Unsuitable Material

Unsuitable material is that material brought to site by the Contractor that fails to comply with the performance specifications listed in Table 1-1. Unsuitable materials may ultimately be approved for use if sufficient documentation and supporting laboratory testing from a suitably qualified agronomist is submitted, stating that the proposed material is equivalent or superior to the material specified.

All costs associated with testing, reworking, removal or replacing any material that the Superintendent deems to be unsuitable for renovation because of non-compliance to the performance specification shall be borne by the Contractor.

2.4 Records

The Contractor shall keep and maintain all Quality System records as required by AS/NZS ISO 9001 and this Specification. They shall be systematically recorded, indexed and filed so as to be retrievable and accessible to the Superintendent or an appointed Quality Auditor on a job basis within one working day of requisition.

2.5 Quality Register

Conformance records shall be stored and maintained such that they are readily retrievable and in facilities that provide a suitable environment to minimise deterioration or damage and to prevent loss.

2.6 Storage

The Contractor shall make the quality records available to the Superintendent at all reasonable times. If requested by the Superintendent, the Contractor shall provide copies of the records or test results at no cost to the Principal.

2.7 Non-conformance

All nonconforming Works detected by the Contractor's Quality System shall be reported to the Superintendent via a Non-conformance Report (NCR) within one working day of being detected. NCR's shall be submitted with all records that indicate a departure from the requirements of the specification. The NCR shall indicate the proposed corrective action.

If the corrective action of the non-conformance cannot be determined within one working day, the Contractor shall submit a partially completed NCR identifying the non-conformance.

The non-conforming product shall not be covered up unless a corrective action has been accepted/approved by the Superintendent and implemented by the Contractor.

A NCR will automatically create a HOLD POINT which shall apply until conformance has been achieved and the Superintendent has signed the Authorisation to Proceed.

2.7.1 Authorisation to Proceed: The Superintendent will issue a Corrective Action Request (CAR) when he detects non-conformance to the Contractors Quality System or Methods. Unless specifically stated, this will not create a Hold Point.

2.7.2 Corrective Action Request (CAR): Where the Superintendent's inspections, surveillance or audits detect product Non-conformance, he will issue a Notice of Non-conformance (NNC). This will immediately create a Hold Point and the Contractor is required to submit an NCR in accordance with this Clause.

2.7.3 Notice of Non-conformance (NNC): In instances where there is a discrepancy between the test results obtained by the Superintendent and those provided by the Contractor, the results from the Superintendent shall prevail except where the Superintendent may determine a specific audit test procedure to resolve the discrepancy.

2.7.4 Inspection and Rectification
Authorised representatives of the Contractor and Superintendent as applicable shall sign off all actions.

The Contractor shall nominate a proposed corrective action for any non-conformance within five (5) working days or shall show cause to the Superintendent for any further delay. Under no circumstances will the deliberation on corrective action of a non-conformance justify an extension of time to the Contract period.

The Contractor shall advise the Superintendent in the NCR of the proposed corrective action of the particular non-conformance. This proposed corrective action will constitute corrective action for the Works or material referred to in the NCR and may comprise one of the following:

a) propose additional Works to bring the Works or material up to the specified standard; or
b) replace all or part of the Works or material to bring it up to the specified standard; or
c) request utilisation of a Works or material for a reduced level of service if such a clause exists in the relevant Technical Specification; or
d) for incidental defects, request that the Superintendent accept the Works or material without alteration as an exception with or without alteration to the respective unit rates.

Any proposed corrective action shall be subject to the approval of the Superintendent. Reworked/replaced Works or materials shall be verified to conform to the specified requirements.

2.7.5 Corrective Action
The Contractor will be required to indicate on the NCR corrective action appropriate to ensure that the Quality Plan is effective in avoiding recurrence of the non-conformance and continues to be effective.